SPECIFICATION SHEET

Olympia Faucets
VALUE FOR BUILDERS

L-6092-WD
i4 Series

Single Handle Lavatory Faucet

- Lever Handle
- 4-3/8” Reach, 2-5/8” From Deck to Aerator
- Ceramic Disc Cartridge
- 1 or 3-Hole 4” Installation
- Brass Pop-Up Drain Assembly
- Easy-Install 18” Flex Supply Lines With 3/8” Connections
- With 1.2 GPM Flow Rate
- Deck Cover Plate Included

Code and Standards

- ASME A112.18.1-2018/CSA B125.1-18
- Cal Green
- NSF/ANSI/CAN 61
- Compliance with AB1953/S152/HB372
- NSF/ANSI 372
- EPA Watersense
- ADA: Compliance to ICC/ANSI A117.1 (Lever Handle Only)
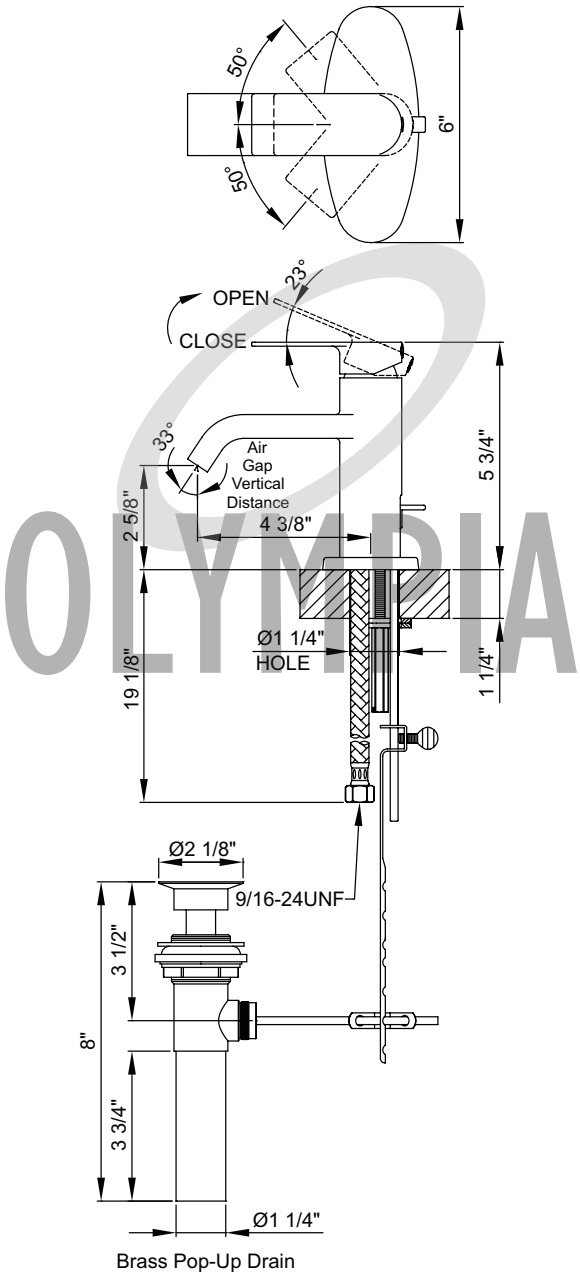
*For other finishes and flow rates offered, please visit our website, email an inquiry to sales@pioneerind.com or contact our sales at 800-338-9468