SPECIFICATION SHEET

OLYMPIA

ELITE SINGLE HANDLE KITCHEN FAUCET

K-4163 SHOWN **ADA**

Model #: _____

Specific Features: _____

Project Name: _____

Submitted For: _____

Date: _____

- Metal Lever Handle
- 'D' Style Spout
- 7-15/16" Reach, 4-3/4" From Deck to Aerator
- Stainless Steel Ball Operation
- 3-Hole 8" Installation
- Side Spray Assembly On Deck
- With 1.5 GPM Flow Rate

Model #	Features	Finish	
K-4163*		CP	
K-4163-BN*		PVD BN	

* Aerator limited to 1.5 GPM Flow Rate

Olympia products are engineered and manufactured to meet the following standards and codes:

ASME A112.18.1
ANSI A117.1
ANSI / NSF 61, SECTION 9
IAPMO LISTED
CONTAINS NO MORE THAN 0.25% WEIGHTED AVERAGE LEAD CONTENT

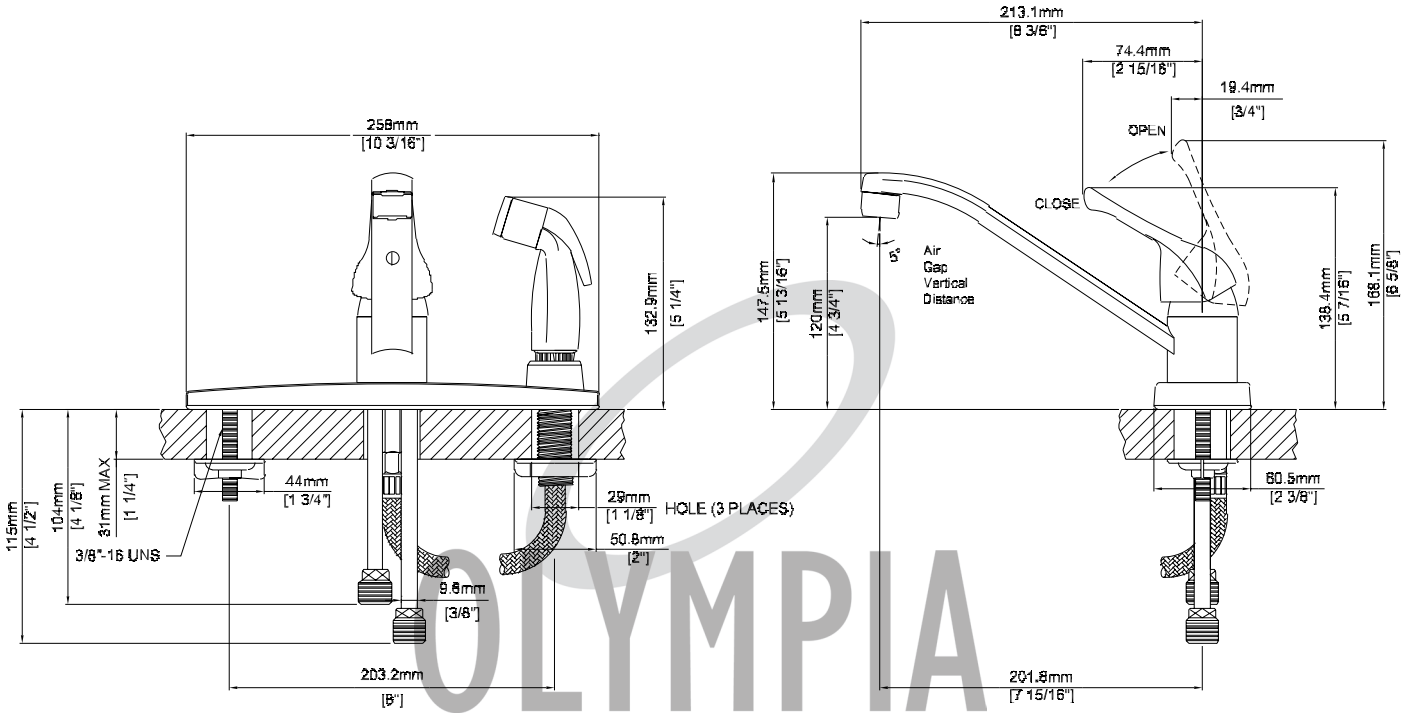

Nashville, TN
www.olympiafaucets.com
Olympia Faucets, Inc. © 2016
A Pioneer Industries Inc. Brand
DMSPK-4163/REV. 09.16