NOTES:

1. TO INSPECT ASSEMBLY, FOLLOW FIRST ARTICLE AND IN PROCESS INSPECTION SHEET.

2. APPLY LOCTITE 680 TO THREADS

3. APPLY LOCTITE 242 TO BRACKET'S THREADS WHEN INSTALLING

BILL OF MATERIAL (CURRENT LEVEL)

ITEM	PT/ASSY	DESCRIPTION	TYPE	QTY.
1	40787	HOOK BACKPLATE	PART	1
2	40786	HOOK POST	PART	1
3	40785	HOOK FINAL	PART	1
4	28XXB	HOOK MOUNTING BRACKET	PART	1
5	1-206	HARDWARE PACK	ASSEMBLY	1
6	91790	.5" DIA. .140" HT. CLEAR RUBBER BUMPER	PART	1

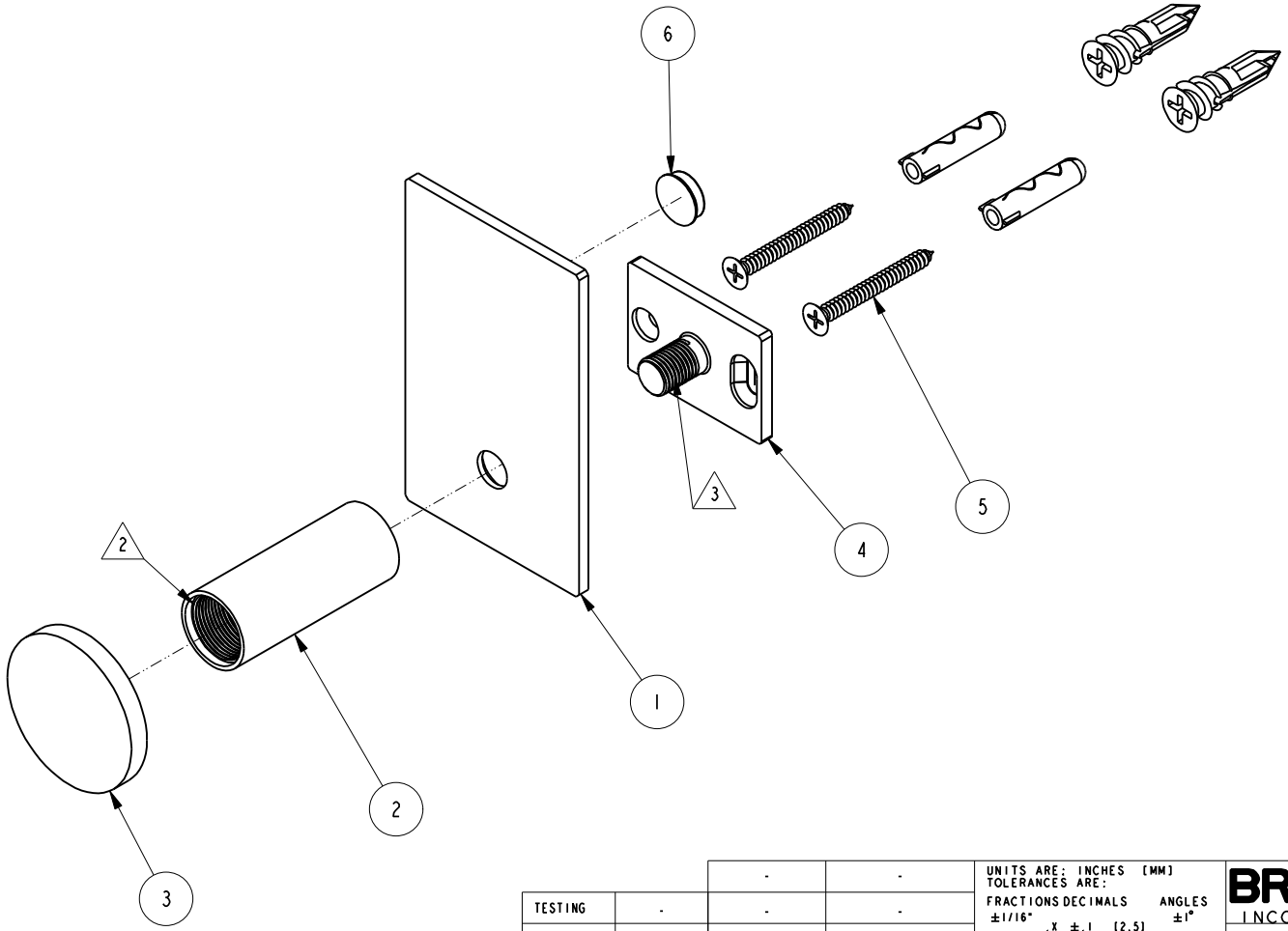

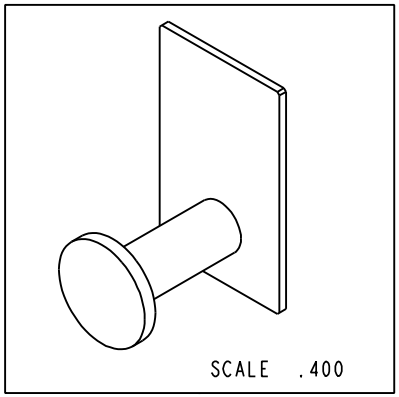

ZONE	REV	DESCRIPTION	DATE	APPROVED
-	B	EN-4300†	10/25/21	R.S.
-	A	EN-4069	01/30/20	J.M.
-	-	EN-3912	08/05/19	J.M.

COPYRIGHT 2005 BRASSTECH, INC. THESE DRAWINGS AND THE DESIGNS DEPICTED HEREIN ARE THE PROPRIETARY PROPERTY OF BRASSTECH. ANY USE OR REPRODUCTION IS SUBJECT TO THE EXPRESS APPROVAL OF BRASSTECH. UNAUTHORIZED USE IS STRICTLY PROHIBITED. ALL RIGHTS RESERVED.

TESTING	-	-	-
ASSEMBLY	-	-	-
PLATING	-	-	-
POLISHING	-	NEXT ASSY	USED ON
MACHINING	-	APPLICATION	
TOOLING FIXTURE #		REMOVE ALL BURRS AND SHARP EDGES	

UNITS ARE: INCHES [MM]
TOLERANCES ARE:
FRACTIONS ±1/16" DECIMALS .X ±.1 [2,5] .XX ±.06 [1,5] ANGLES ±1°
(X.XXX) DENOTES CRITICAL DIMS.
ALL THREADS ARE CRITICAL

DRAWN	JINSON	10/25/21
CHECKED	R.S.	10/25/21
APPROVED	R.S.	10/25/21

BRASSTECH INCORPORATED
2001 CARNEGIE AVE.
SANTA ANA, CA 92705
(949) 417-5207

SINGLE ROBE HOOK

DWG NO. 2540-1650 REV B

SCALE .600 REF. - SHEET 1 OF 2

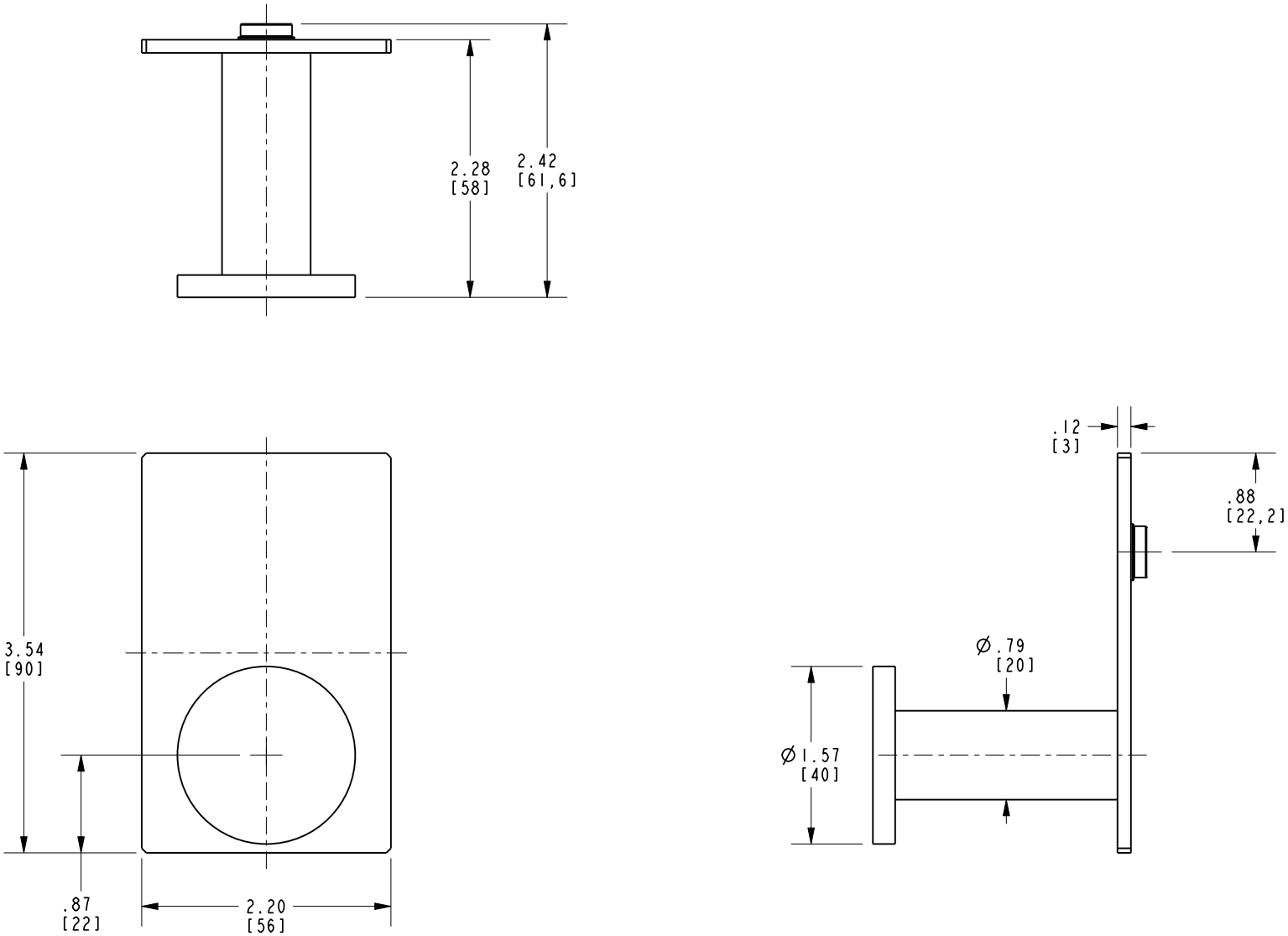

BRASSTECH
INCORPORATED
2001 E. CARNEGIE AVE.
SANTA ANA, CA 92705
(949) 417-5207

DWG NO.	REV
2540-1650	B

SCALE	REF.	SHEET
.700	-	2 OF 2