NOTES:

1. TO INSPECT ASSEBMLY, FOLLOW FIRST ARTICLE AND IN PROCESS INSPECTION SHEET.

2. REMOVE AND DISCARD THIS PLASTIC NUT.

BILL OF MATERIAL (CURRENT LEVEL)

ITEM	PT/ASSY	DESCRIPTION	TYPE	QTY.
1	5-034	AIR GAP BODY	ASSEMBLY	1
2	3180-5751	AIR CAP ASM	ASSEMBLY	1

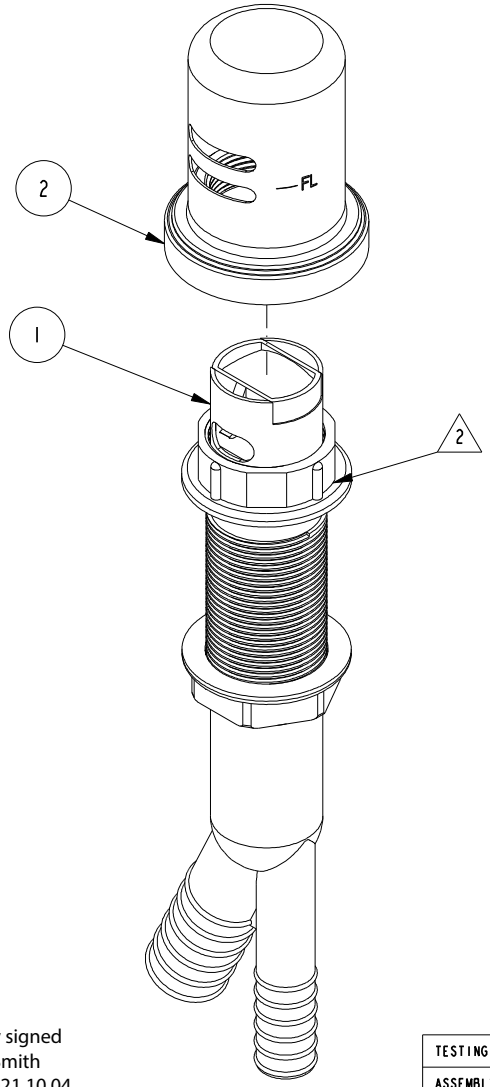

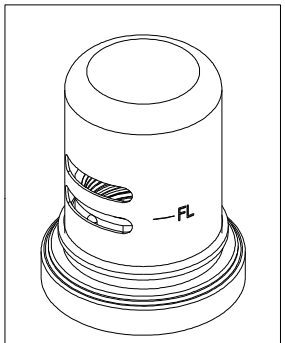

SCALE .500

Ray Smith

Digitally signed by Ray Smith
Date: 2021.10.04 15:43:35 -04'00'

ZONE	REV	DESCRIPTION	DATE	APPROVED
-	A	EN-4300	09/23/21	R.S.
-	-	EN-3229	03/15/17	J.M.

COPYRIGHT 2005 BRASSTECH, INC. THESE DRAWINGS AND THE DESIGNS DEPICTED HEREIN ARE THE PROPRIETARY PROPERTY OF BRASSTECH. ANY USE OR REPRODUCTION IS SUBJECT TO THE EXPRESS APPROVAL OF BRASSTECH. UNAUTHORIZED USE IS STRICTLY PROHIBITED. ALL RIGHTS RESERVED.

		-	-
TESTING	-	-	-
ASSEMBLY	-	-	-
PLATING	-	-	-
POLISHING	-	NEXT ASSY	USED ON
MACHINING	-	APPLICATION	
TOOLING FIXTURE #		REMOVE ALL BURRS AND SHARP EDGES	

UNITS ARE: INCHES [MM]
TOLERANCES ARE:
FRACTIONS ±1/16" DECIMALS .X ±.1 [2.5] .XX ±.06 [1.5] ANGLES ±1°
(X.XXX) DENOTES CRITICAL DIMS.
ALL THREADS ARE CRITICAL

DRAWN	VINAY	02/22/17
CHECKED	RAVINDRA	02/22/17
APPROVED	J.M.	02/22/17

BRASSTECH INCORPORATED
2001 CARNEGIE AVE.
SANTA ANA, CA 92705
(949) 417-5207

AIR GAP ASM

DWG NO. 3180-5711 REV A

SCALE .500 REF. - SHEET 1 OF 2

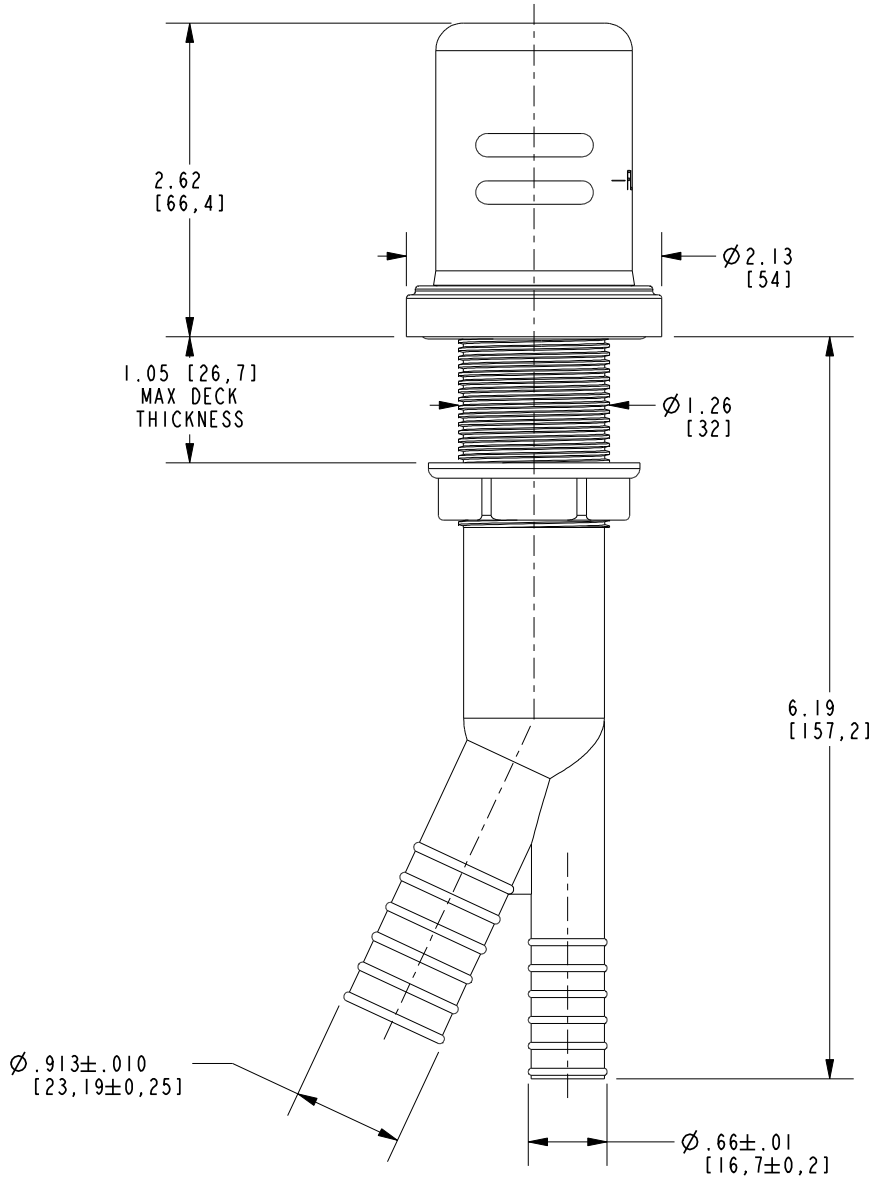

BRASSTECH
INCORPORATED
2001 E. CARNEGIE AVE.
SANTA ANA, CA 92705
(949) 417-5207

DWG NO.	REV
3180-5711	A

SCALE	REF.	SHEET
.625	-	2 OF 2