NOTES:

(N1) 1. FIT / FORM / FUNCTION SHALL FOLLOW PS-E.008.

BILL OF MATERIAL (CURRENT LEVEL)

ITEM	PT/ASSY	DESCRIPTION	TYPE	QTY.
1	2-990	TUB AND SHOWER PLATE ASM	ASSEMBLY	1
2	2-989	COLLAR ASM	ASSEMBLY	1
3	91308	TEMP LIMIT STOP - THERMO	PART	1
4	12344	HANDLE BONNET	PART	1
5	12345	SLEEVE - THERMO	PART	1
6	2-991	THERMO BONNET ASM	ASSEMBLY	1
7	92113	SCRW, M4 X .7 X 40 PHL FLT HD SS	PART	2
8	2-442	LEVER HANDLE ASM	ASSEMBLY	2

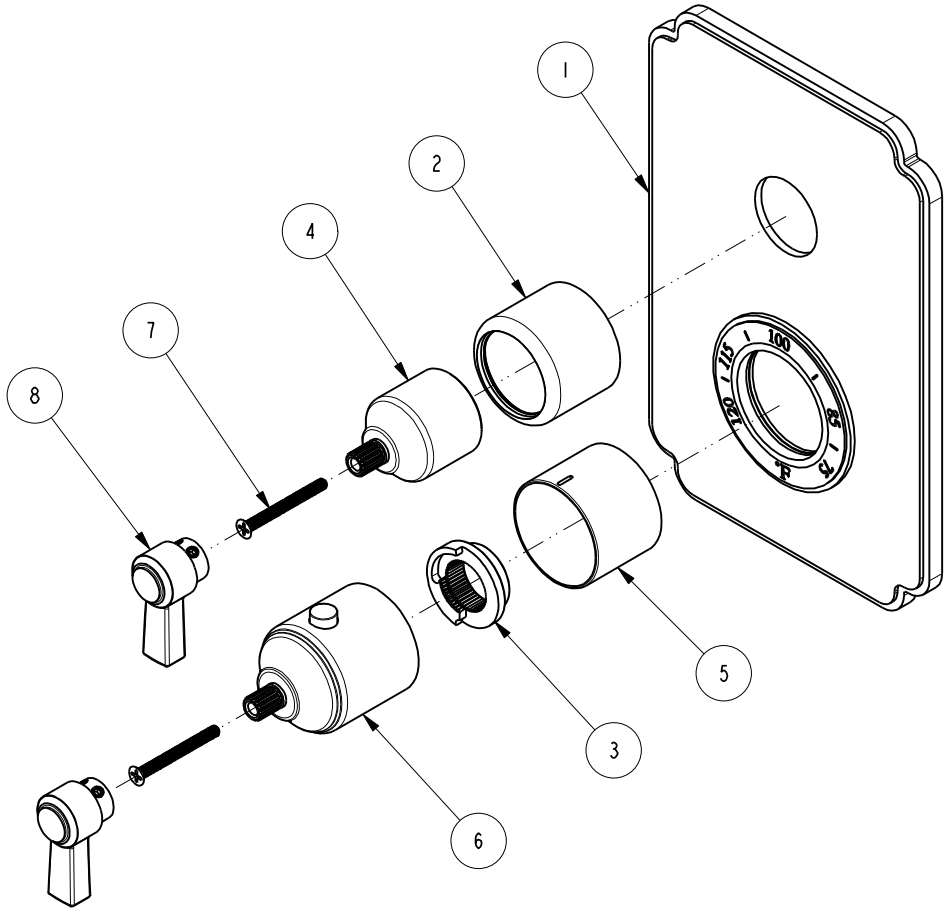

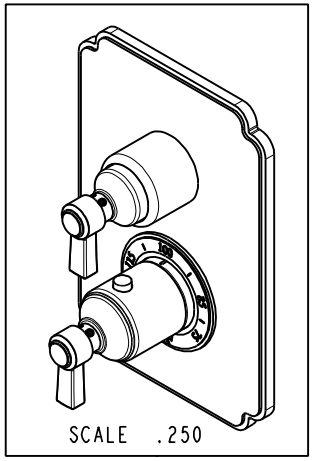

Joe Manga

Digitally signed by Joe Manga
DN: cn=Joe Manga, o, ou=Brasstech Inc, email=jmanga@brasstech.com, c=US
Reason:
Date: 2017.02.06 13:33:17 -08'00'

ZONE	REV	DESCRIPTION	DATE	APPROVED
-	A	EN-3236	01/17/17	R.S.
-	-	EN-2775h	11/20/15	J.M.

COPYRIGHT 2005 BRASSTECH, INC. THESE DRAWINGS AND THE DESIGNS DEPICTED HEREIN ARE THE PROPRIETARY PROPERTY OF BRASSTECH. ANY USE OR REPRODUCTION IS SUBJECT TO THE EXPRESS APPROVAL OF BRASSTECH. UNAUTHORIZED USE IS STRICTLY PROHIBITED. ALL RIGHTS RESERVED.

TESTING	-	-	-
ASSEMBLY	-	-	-
PLATING	-	-	-
POLISHING	-	NEXT ASSY	USED ON
MACHINING	-	APPLICATION	
TOOLING FIXTURE #		REMOVE ALL BURRS AND SHARP EDGES	

UNITS ARE: INCHES [MM]
TOLERANCES ARE:
FRACTIONS ±1/16" DECIMALS .X ±.1 [2,5] .XX ±.06 [1,5] ANGLES ±1°
(X.XXX) DENOTES CRITICAL DIMS.
ALL THREADS ARE CRITICAL

DRAWN	JINSON	01/17/17
CHECKED	RAVINDRA	01/17/17
APPROVED	R.S.	01/17/17

BRASSTECH INCORPORATED
2001 CARNEGIE AVE.
SANTA ANA, CA 92705
(949) 417-5207

THERMO TUB / SHOWER

DWG NO. 3-913TS REV A

SCALE .375 REF. - SHEET 1 OF 2

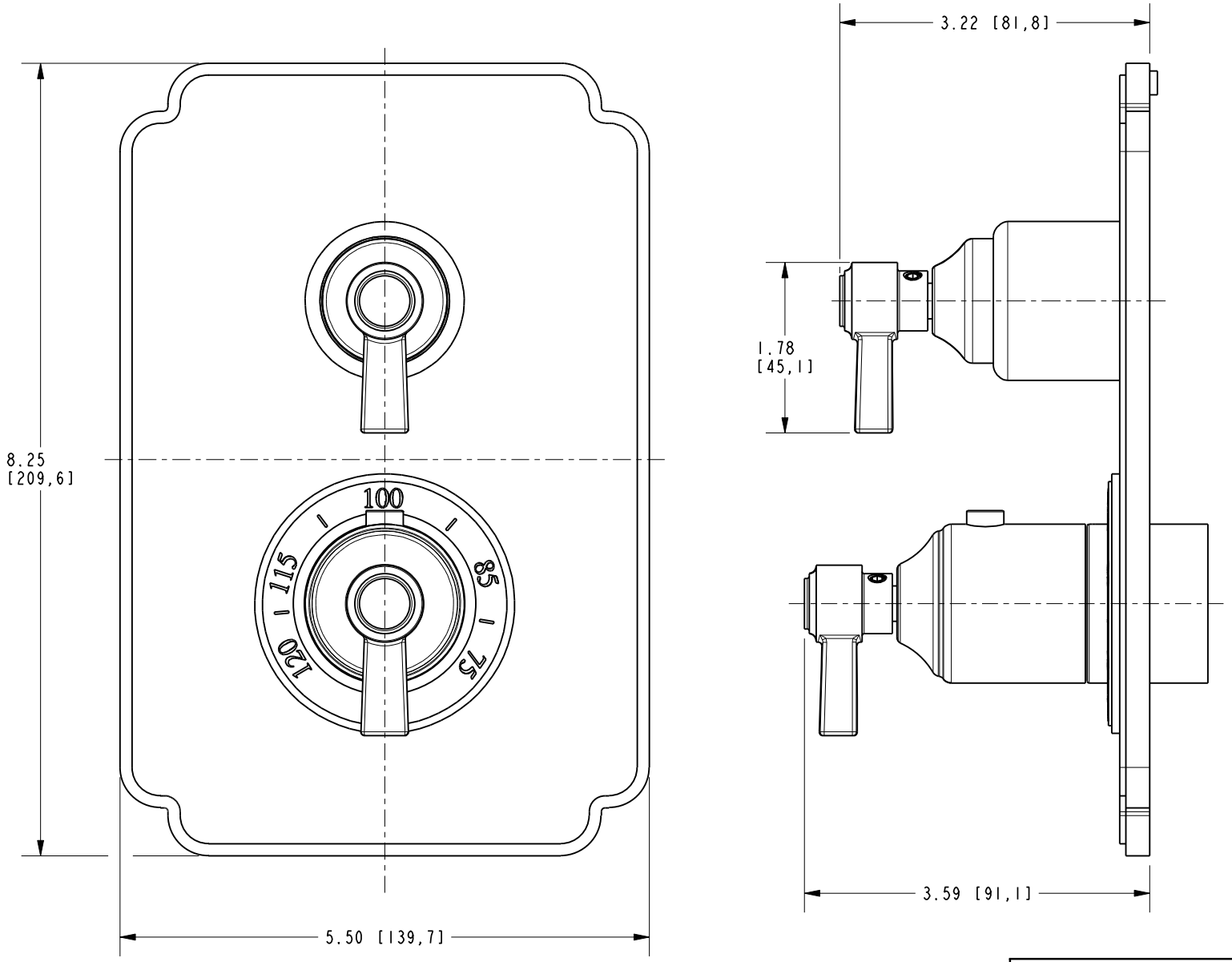

BRASSTECH INCORPORATED

2001 E. CARNEGIE AVE.
SANTA ANA, CA 92705
(949) 417-5207

DWG NO.	REV
3-913TS	A

SCALE	REF.	SHEET
.625	-	2 OF 2