NOTES:

1. TO INSPECT ASSEBMLY, FOLLOW FIRST ARTICLE AND IN PROCESS INSPECTION SHEET.
2. APPLY LOCTITE 680.
3. SLIT AND SHORTEN O-RING BY .13" TO .20" IN LENGTH BEFORE INSTALLING.
4. SLIT O-RING BEFORE INSTALLING.
5. INSTALLATION TORQUE: 8 -14 LB-FT.
6. WATER TEST WHOLE UNIT.
7. BAG 5-007 IN A SEPARATE BAG.
8. APPLY THIN FILM OF DOW CORNING 111.
9. APPLY LOCTITE 242.
10. INSTALLATION TORQUE: 10-14 LB-IN.

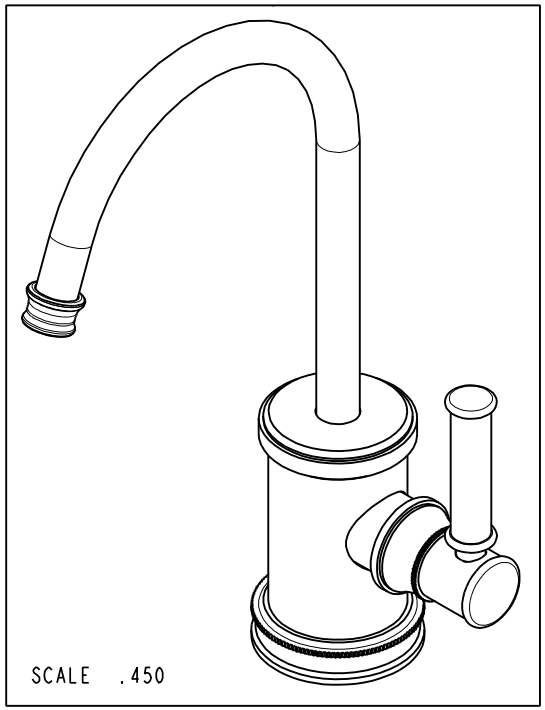

BILL OF MATERIAL (CURRENT LEVEL)

ITEM	PT/ASSY	DESCRIPTION	TYPE	QTY.
1	1-134	CARTR 3/8 HOT 1/4 TR	PART	1
2	5-007	1/4 COMP KIT	ASSEMBLY	1
3	10514	MOUNTING CRESCENT	PART	1
4	10516	MOUNTING NUT	PART	1
5	10661	MOUNTING STUD	PART	1
6	11733	SHELL, SPOUT, WATER DISP	PART	1
7	11834	ADAPTER	PART	1
8	12511	ESCUTCHEON	PART	1
9	12512	BONNET	PART	1
10	12513	BODY CAP	PART	1
11	12514	LEVER HANDLE	PART	1
12	12515	HANDLE HUB	PART	1
13	12549	BODY	PART	1
14	50713	SPOUT, WATER DISP. (TRAD.)	PART	1
15	50714	WATER DISP. CAR.T HOLDER	PART	1
16	50760	NIPPLE WATER DISP	PART	1
17	91017	O-RING, #2- 012, EPDM, 65-75 DURO, NSF 61	PART	2
18	91023	O-RING, #2- 019, EPDM, 65-75 DURO, NSF 61	PART	1
19	91063	MOUNTING CRESCENT GASKET	PART	1
20	91382	O-RING, #2- 012, TEFLON,	PART	1
21	91383	O-RING, #2- 014, TEFLON, NSF 61	PART	1
22	91424	WSHR, .81 ID X .93 OD X .045 THK, FLT, PLST	PART	1
23	91768	O-RING, #2-130, EP, 50 DURO - GREY	PART	1
24	92192	SCRW, 10-32 X 5/8 SKT HD CUP PT SS	PART	1
25	92477	SCRW, M4 X 16 SKT FLT HD SS	PART	1

ZONE	REV	DESCRIPTION	DATE	APPROVED
-	D	EN-4300jj	04/12/21	R.S.
-	C	EN-3941	08/28/19	C.G.
-	B	EN-3722	02/08/19	C.G.
-	A	EN-3298	03/31/17	J.A.
-	-	EN-2980	09/12/16	V.V.

COPYRIGHT 2005 BRASSTECH, INC. THESE DRAWINGS AND THE DESIGNS DEPICTED HEREIN ARE THE PROPRIETARY PROPERTY OF BRASSTECH. ANY USE OR REPRODUCTION IS SUBJECT TO THE EXPRESS APPROVAL OF BRASSTECH. UNAUTHORIZED USE IS STRICTLY PROHIBITED. ALL RIGHTS RESERVED.

TESTING	-	-	-
ASSEMBLY	-	-	-
PLATING	-	-	-
POLISHING	-	NEXT ASSY	USED ON
MACHINING	-	APPLICATION	
TOOLING FIXTURE #		REMOVE ALL BURRS AND SHARP EDGES	

UNITS ARE: INCHES [MM]
TOLERANCES ARE:
FRACTIONS ±1/16" DECIMALS .X ±.1 [2,5] .XX ±.06 [1,5] ANGLES ±1°
(X.XXX) DENOTES CRITICAL DIMS.
ALL THREADS ARE CRITICAL

DRAWN	JINSON	04/12/21
CHECKED	R.S.	04/12/21
APPROVED	R.S.	04/12/21

BRASSTECH INCORPORATED
2001 CARNEGIE AVE.
SANTA ANA, CA 92705
(949) 417-5207

COLD WATER DISPENSER

DWG NO. 2940-5623 REV D

SCALE .250 REF. - SHEET 1 OF 3

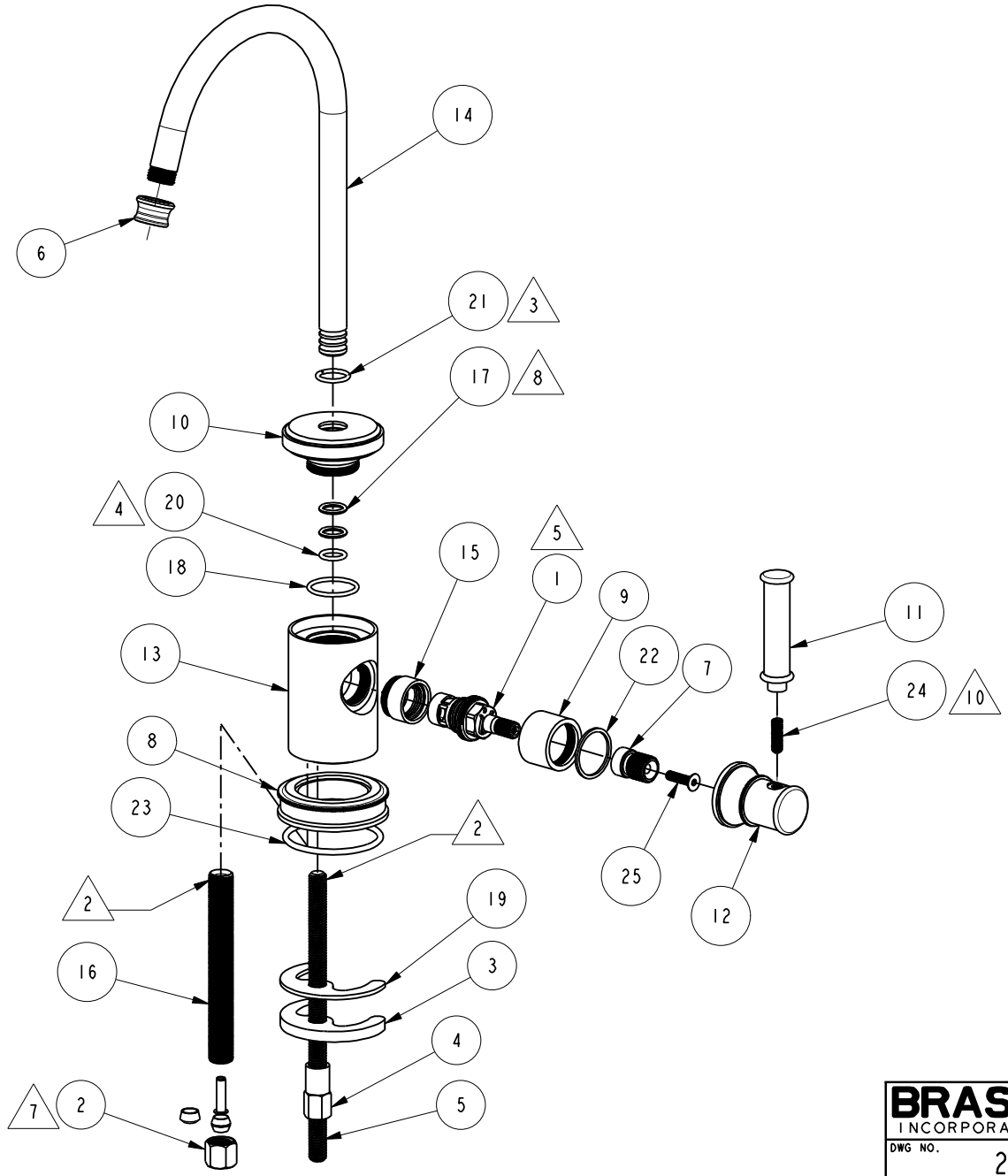

BRASSTECH INCORPORATED

2001 E. CARNEGIE AVE.
SANTA ANA, CA 92705
(949) 417-5207

DWG NO.	REV
2940-5623	D

SCALE	REF.	SHEET
.325	-	2 OF 3

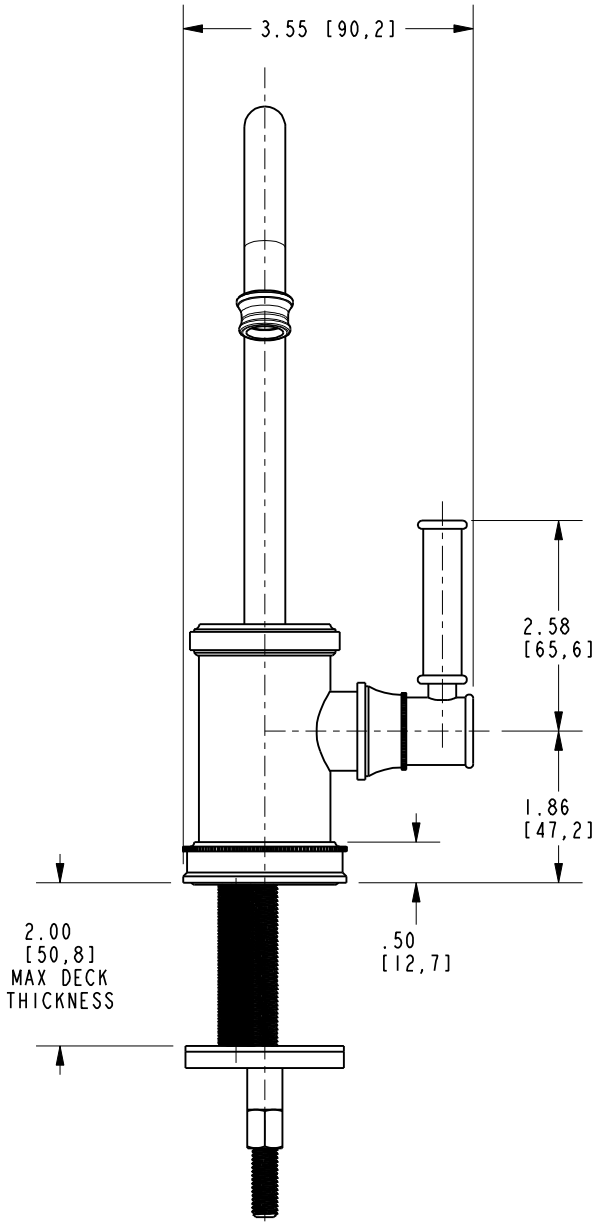

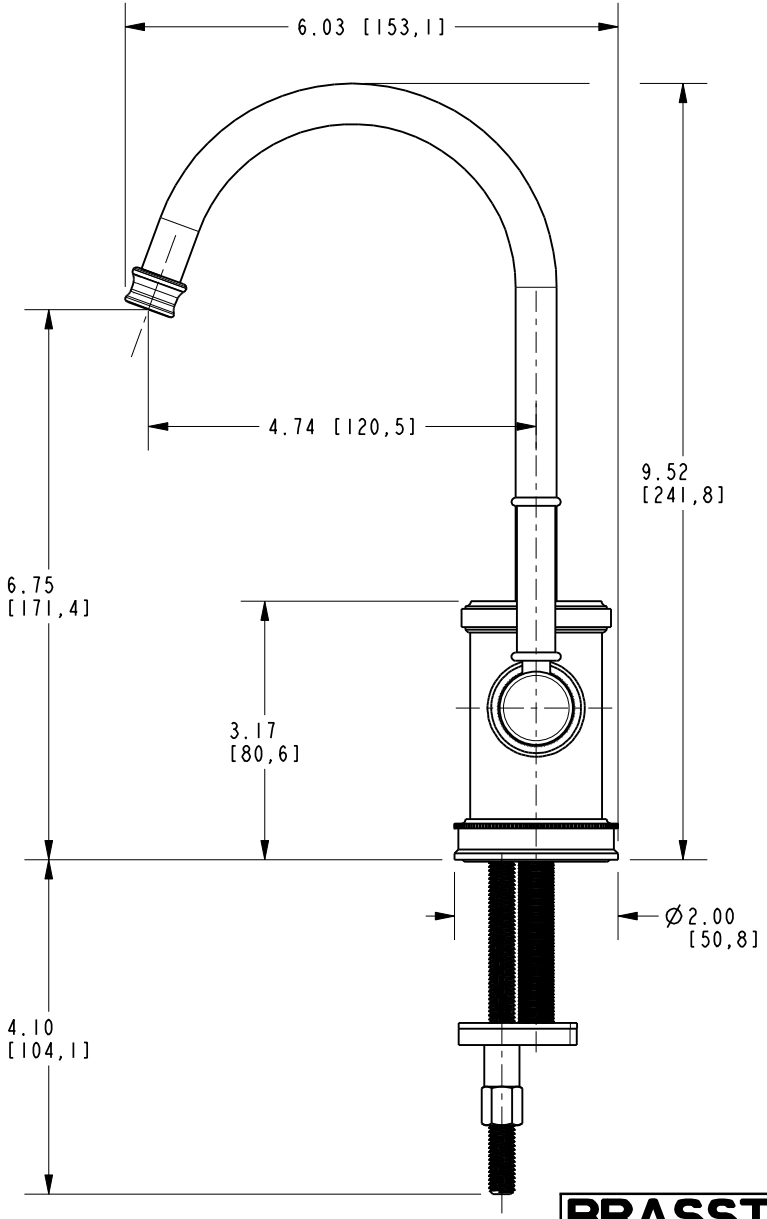

BRASSTECH INCORPORATED

2001 E. CARNEGIE AVE.
SANTA ANA, CA 92705
(949) 417-5207

DWG NO.	REV
2940-5623	D

SCALE	REF.	SHEET
.425	-	3 OF 3