NOTES:

(N1) 1. FIT / FORM / FUNCTION SHALL FOLLOW PS-E.008.

BILL OF MATERIAL (CURRENT LEVEL)

ITEM	PT/ASSY	DESCRIPTION	TYPE	QTY.
1	20-148	EXTENSION SLEEVE ASM	ASSEMBLY	1
2	12472	EXTENSION SLEEVE - THERMO	PART	1
3	11051	STEM EXTENSION - THERMO	PART	1
4	12824	STEM EXTENSION - THERMO	PART	1
5	92114	SCRW, M4 X .7 X 75 PHIL FLT HD SS	PART	2
6	92869	SCRW, M4 X .7 X 90 PHIL PAN HD SS	PART	2

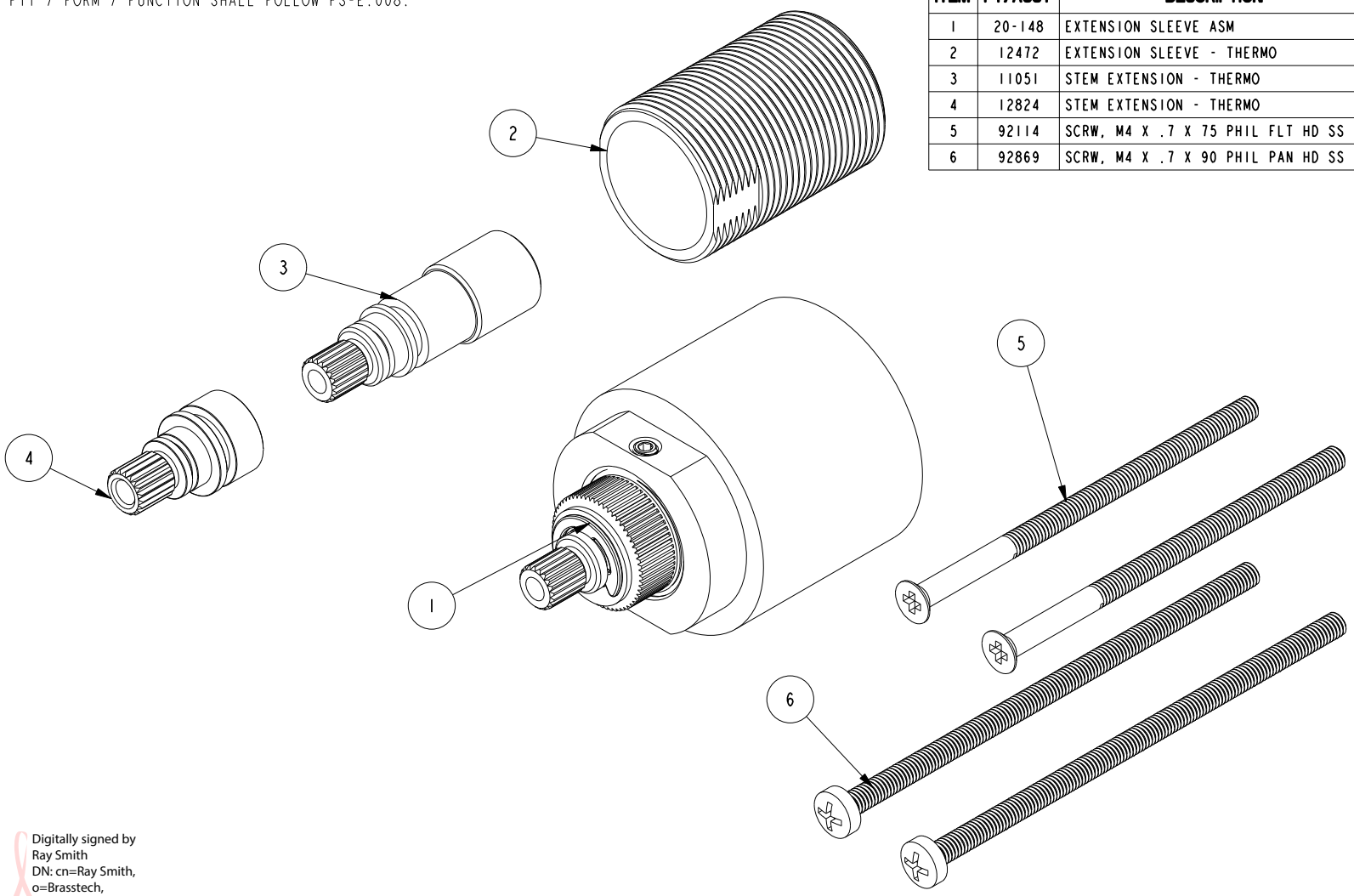

Ray Smith

Digitally signed by Ray Smith
DN: cn=Ray Smith, o=Brasstech, ou=Engineering, email=rsmith@brasstech.com, c=US
Date: 2018.07.12 10:32:44 -04'00'

ZONE	REV	DESCRIPTION	DATE	APPROVED
-	C	EN-3647	06/29/18	R.S.
-	B	EN-3438	02/21/18	J.M.
-	A	EN-3403	09/18/17	J.M.
-	-	EN-2775h	11/23/15	J.M.

COPYRIGHT 2005 BRASSTECH, INC. THESE DRAWINGS AND THE DESIGNS DEPICTED HEREIN ARE THE PROPRIETARY PROPERTY OF BRASSTECH. ANY USE OR REPRODUCTION IS SUBJECT TO THE EXPRESS APPROVAL OF BRASSTECH. UNAUTHORIZED USE IS STRICTLY PROHIBITED. ALL RIGHTS RESERVED.

		-	-
TESTING	-	-	-
ASSEMBLY	-	-	-
PLATING	-	-	-
POLISHING	-	NEXT ASSY	USED ON
MACHINING	-	APPLICATION	
TOOLING FIXTURE #		REMOVE ALL BURRS AND SHARP EDGES	

UNITS ARE: INCHES [MM]
TOLERANCES ARE:
FRACTIONS ±1/16" DECIMALS .X ±.1 [2.5] .XX ±.06 [1.5] ANGLES ±1°
(X.XXX) DENOTES CRITICAL DIMS.
ALL THREADS ARE CRITICAL

DRAWN	R.S.	11/23/15
CHECKED	J.M.	11/23/15
APPROVED	J.M.	11/23/15

BRASSTECH INCORPORATED
2001 CARNEGIE AVE.
SANTA ANA, CA 92705
(949) 417-5207

EXTENSION KIT 1/2" THERMO

DWG NO. 20-146 REV C

SCALE 1.000 REF. - SHEET 1 OF 1