NOTES:

1. TO INSPECT ASSEBMLY, FOLLOW FIRST ARTICLE AND IN PROCESS INSPECTION SHEET.

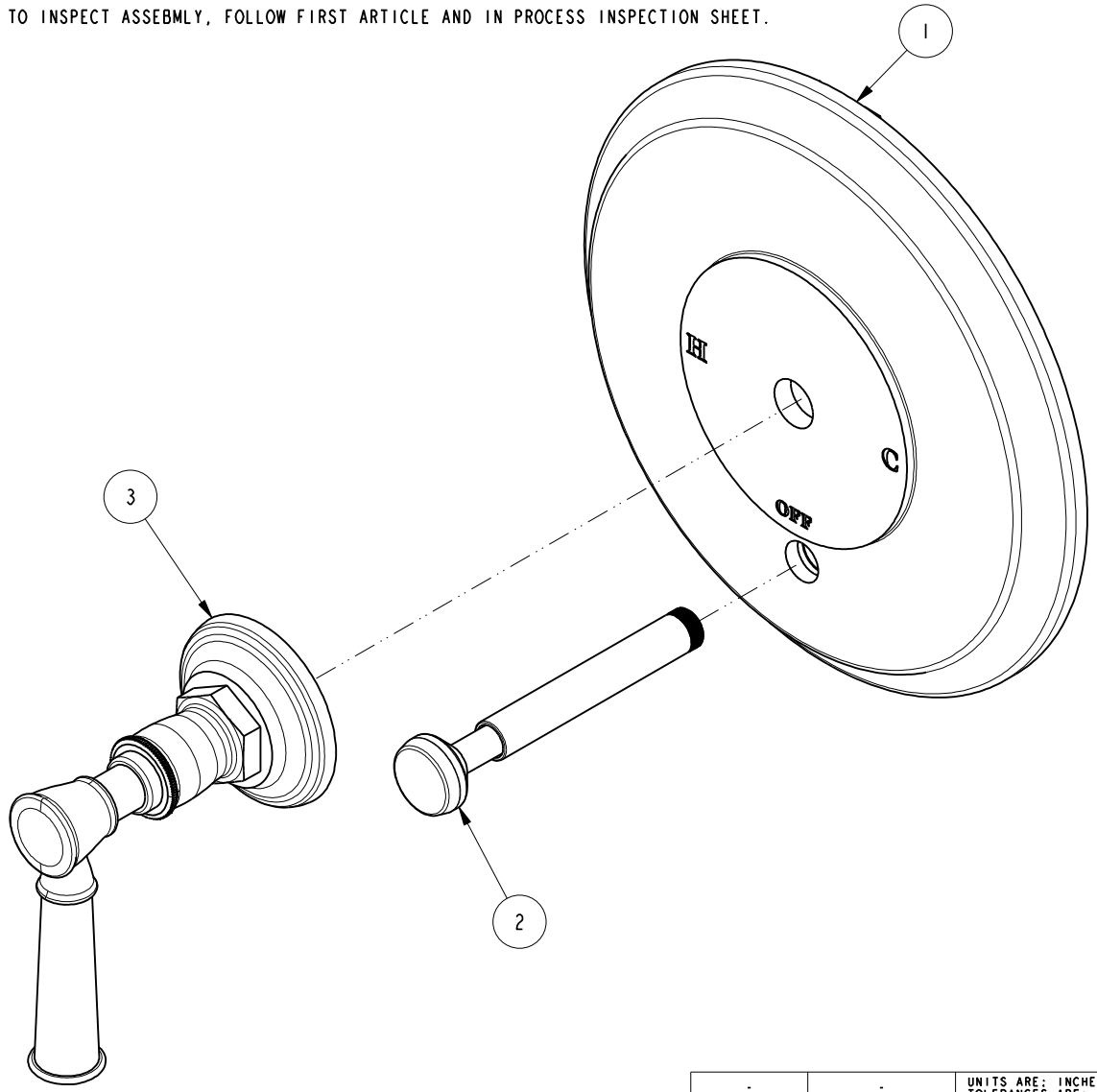

BILL OF MATERIAL (CURRENT LEVEL)

ITEM	PT/ASSY	DESCRIPTION	TYPE	QTY.
1	2-659	TUB/SHOWER PLATE	ASSEMBLY	1
2	2-217	DIVERTER TRIM KIT	ASSEMBLY	1
3	3-561	LEVER HANDLE W/ESC,	ASSEMBLY	1

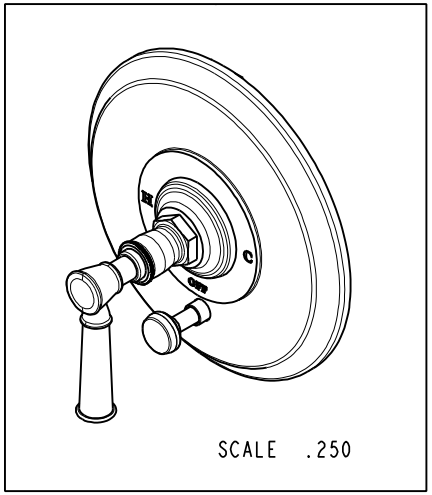

ZONE	REV	DESCRIPTION	DATE	APPROVED
-	A	EN-4300e	04/28/21	R.S.
-	-	EN-2838c	08/10/15	J.M

COPYRIGHT 2005 BRASSTECH, INC. THESE DRAWINGS AND THE DESIGNS DEPICTED HEREIN ARE THE PROPRIETARY PROPERTY OF BRASSTECH. ANY USE OR REPRODUCTION IS SUBJECT TO THE EXPRESS APPROVAL OF BRASSTECH. UNAUTHORIZED USE IS STRICTLY PROHIBITED. ALL RIGHTS RESERVED.

TESTING	-	-	-
ASSEMBLY	-	-	-
PLATING	-	-	-
POLISHING	-	NEXT ASSY	USED ON
MACHINING	-	APPLICATION	
TOOLING FIXTURE #		REMOVE ALL BURRS AND SHARP EDGES	

UNITS ARE: INCHES [MM]
TOLERANCES ARE:
FRACTIONS ±1/16" DECIMALS .X ±.1 [2,5] .XX ±.06 [1,5] ANGLES ±1°
(X.XXX) DENOTES CRITICAL DIMS.
ALL THREADS ARE CRITICAL

DRAWN	JINSON	04/28/21
CHECKED	R.S.	04/28/21
APPROVED	R.S.	04/28/21

BRASSTECH INCORPORATED
2001 CARNEGIE AVE.
SANTA ANA, CA 92705
(949) 417-5207

BP TRIM PLATE WITH DIVERTER

DWG NO. 5-2912BP REV A

SCALE .500 REF. - SHEET 1 OF 2

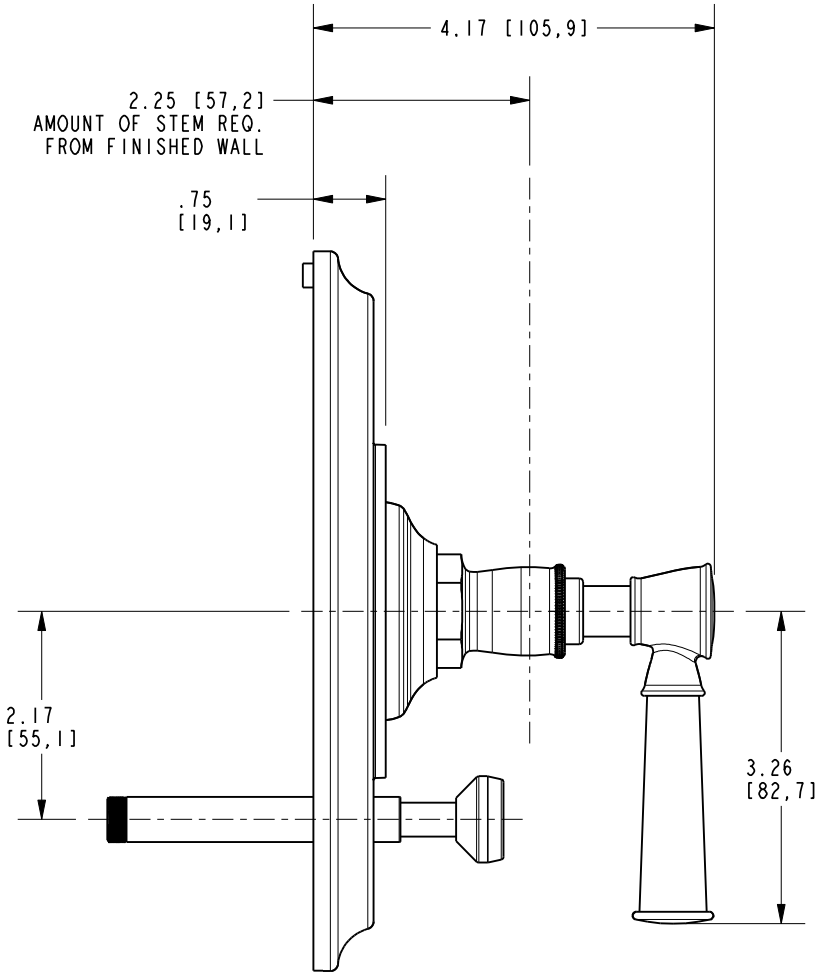

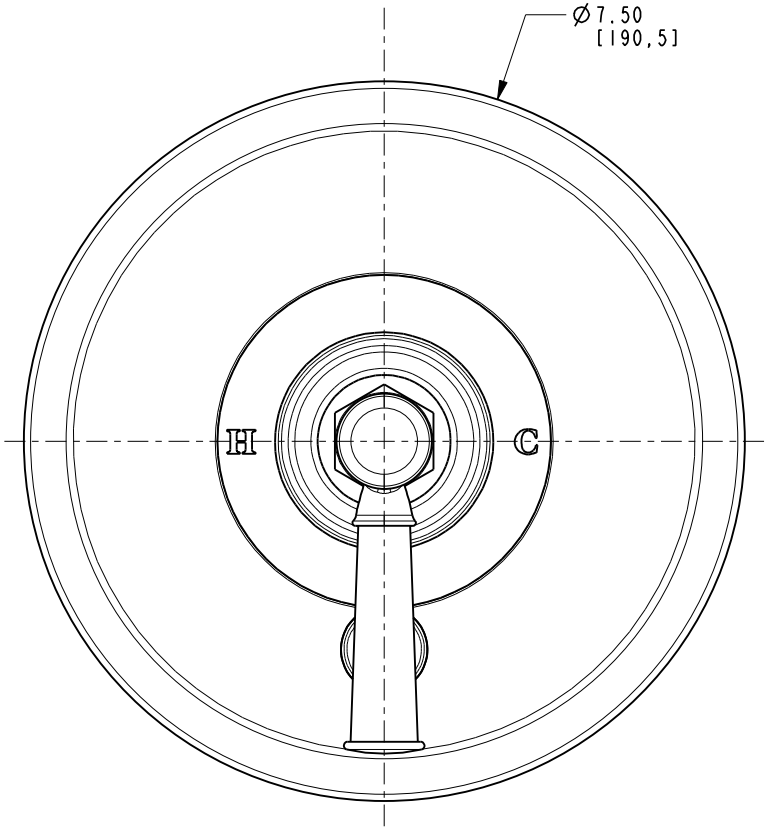

BRASSTECH INCORPORATED
2001 E. CARNEGIE AVE.
SANTA ANA, CA 92705
(949) 417-5207

DWG NO.	REV
5-2912BP	A

SCALE	REF.	SHEET
.500	-	2 OF 2