# MOEN®

# *Illustrated Parts*

- **Order by Part Number**
- **Trim can be used with U231 series or U361 series valves**

**GENTA™**
**M-CORE Transfer Valve Trim Kit**

| MODEL | HANDLE | FINISH |
|---|---|---|
| UT2401 | Lever | Chrome |
| UT2401BL | Lever | Matte Black |
| UT2401BN | Lever | Brushed Nickel |

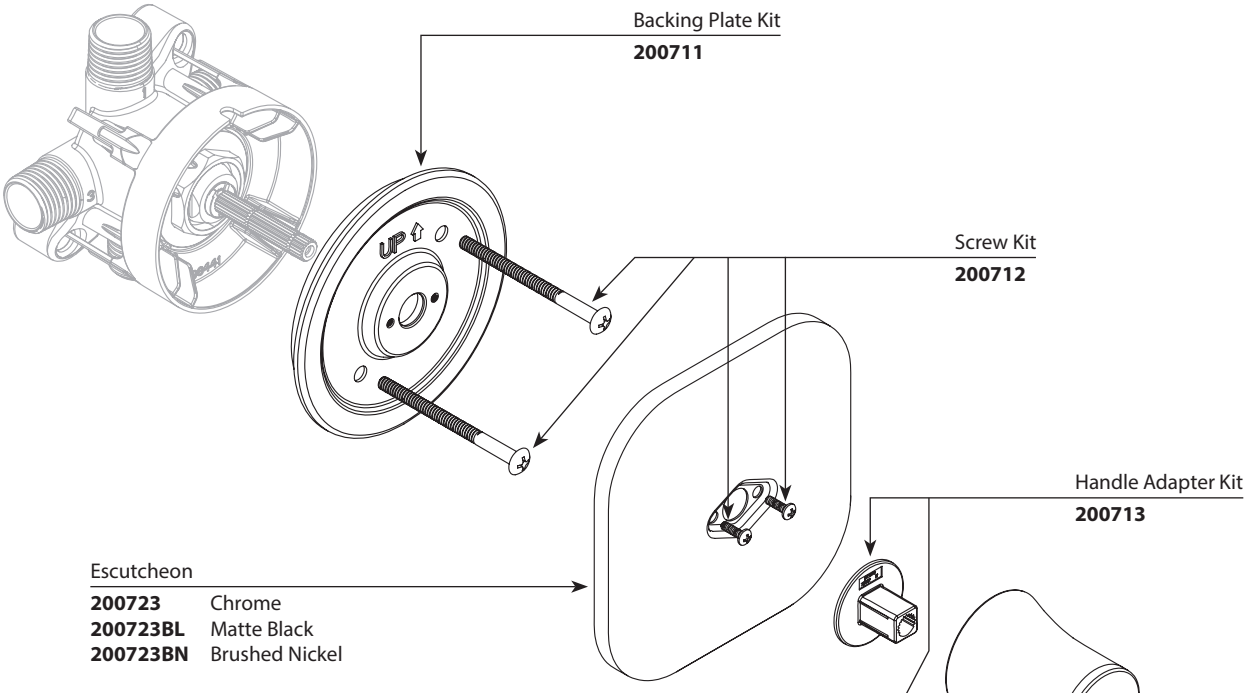


**Optional 2" Handle Extension Kit 2000760**

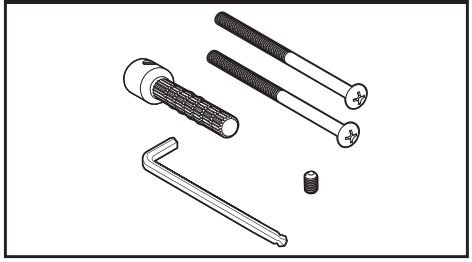



**TO ORDER PARTS CALL: 1-800-BUY-MOEN**
**www.moen.com**

05/27/2020 EXP-2340 500004406372
Released 01