MOEN

Buy it for looks. Buy it for life.®

Illustrated Parts

■ **Order by Part Number**

Single-Handle High-Arc Pull Out Kitchen Faucet w/Sink Combo
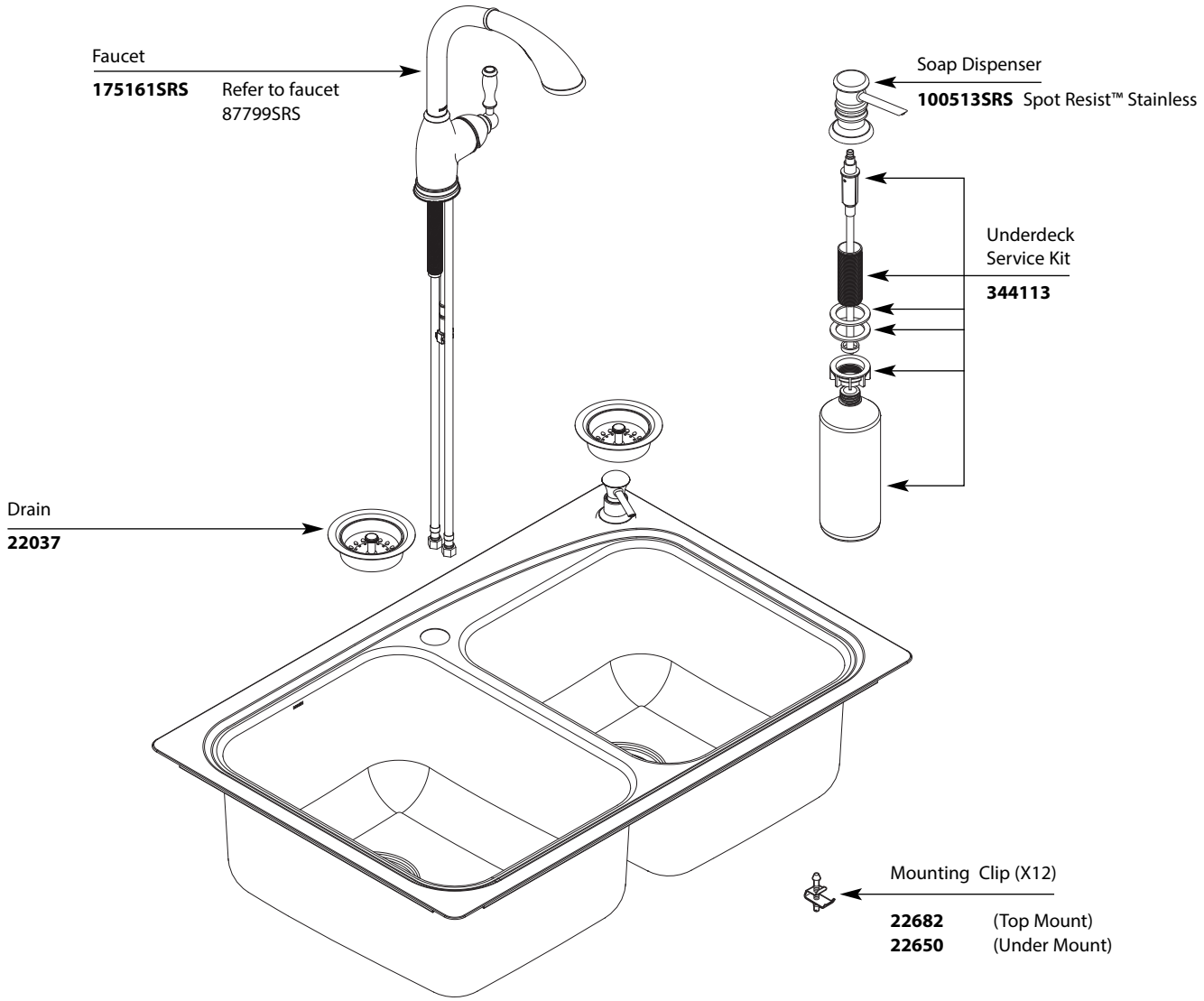
MODEL	TYPE	FINISH
21657	COMBO	Spot Resist™ Stainless