MOEN

Buy it for looks. Buy it for life.®

Illustrated Parts

BELHURST™
Two Handle Lavatory Faucet

MODEL	TYPE	FINISH
84340	Lever	Chrome
84340SRN	Lever	Spot Resist Brushed Nickel

■ **Order by Part Number**

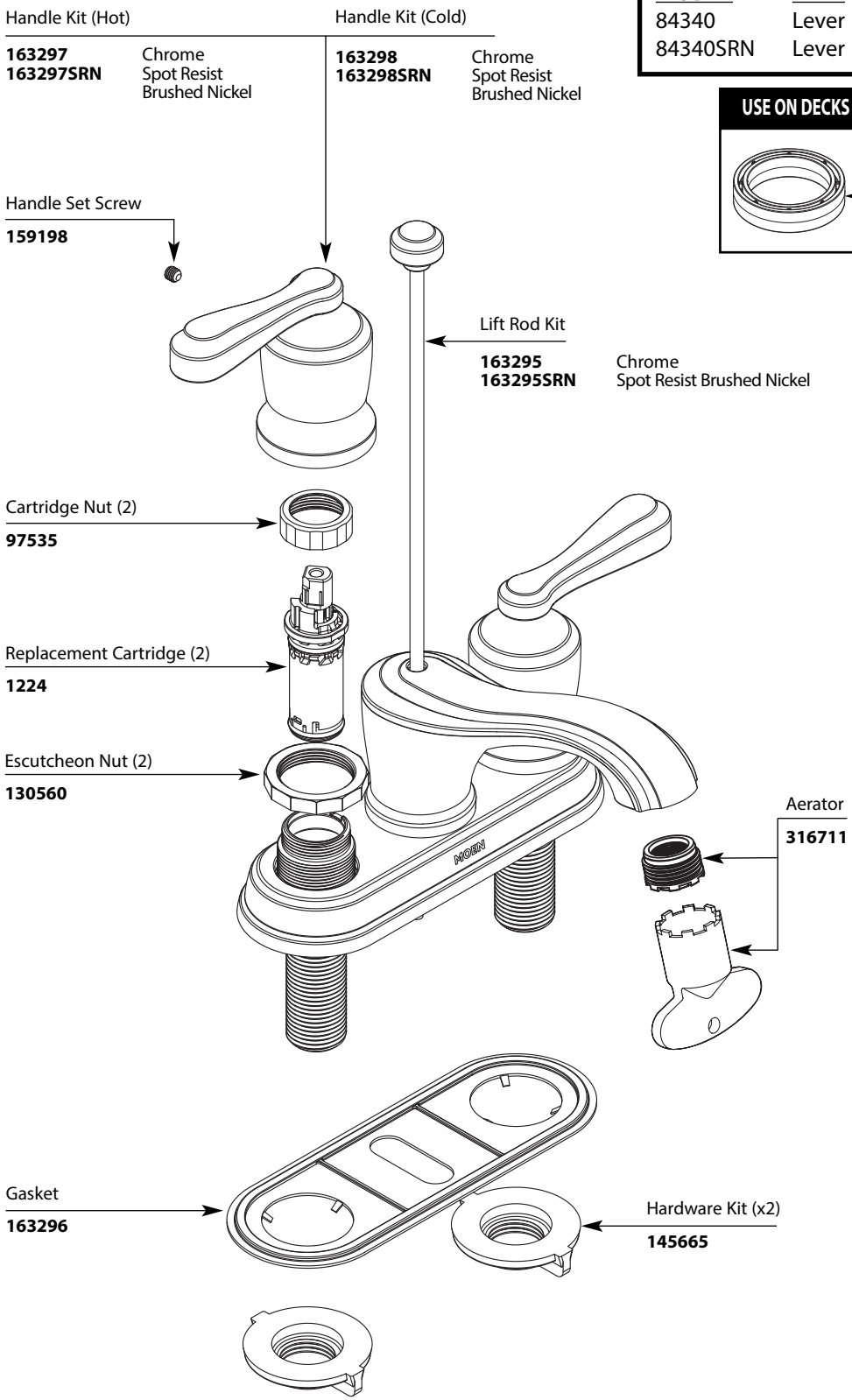

USE ON DECKS < 1/4" (6mm)

Thin Deck Spacer Kit
146936

USE ON DECKS > 1-1/8" (29mm)

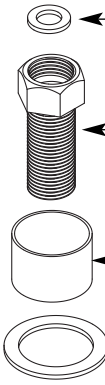

Deck Extension Kit
100818

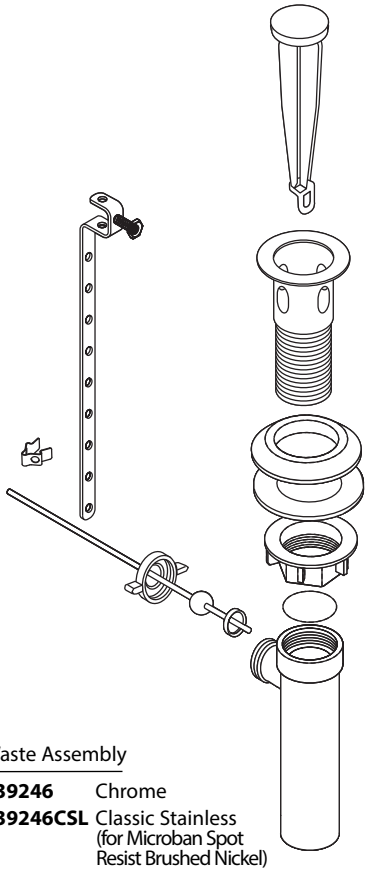

Waste Assembly

139246	Chrome
139246CSL	Classic Stainless (for Microban Spot Resist Brushed Nickel)

Rev. 3/14

TO ORDER PARTS CALL: 1-800-BUY-MOEN
www.moen.com

09/29/2014 EXP71460 500000155313
Released/14