INSTALLATION SPECIFICATION

Sku:	706373M-CTP-GW
Product Dimensions:	73"W x 22"D x 9"H
Sink-External Dimension:	20⅞"W x 14¾"D x 8¼"H
Sink-Internal Dimension:	17⅝"W x 11⅝"D x 6⅝"H
Countertop Thickness:	1⅜"
Drain Hole Diameter:	ϕ 1⅞"
Weight:	149.5 lbs
Material:	Engineered Stone
Color Finish:	Grain White（GW）
Edge Polishing:	Flat Edge
Faucet Hole Spacing(in.):	4 in.Widespread
Sink:	Double Sinks

All maesurements are approximate .Maesurements may vary +/-½

Jaen

73"x22"
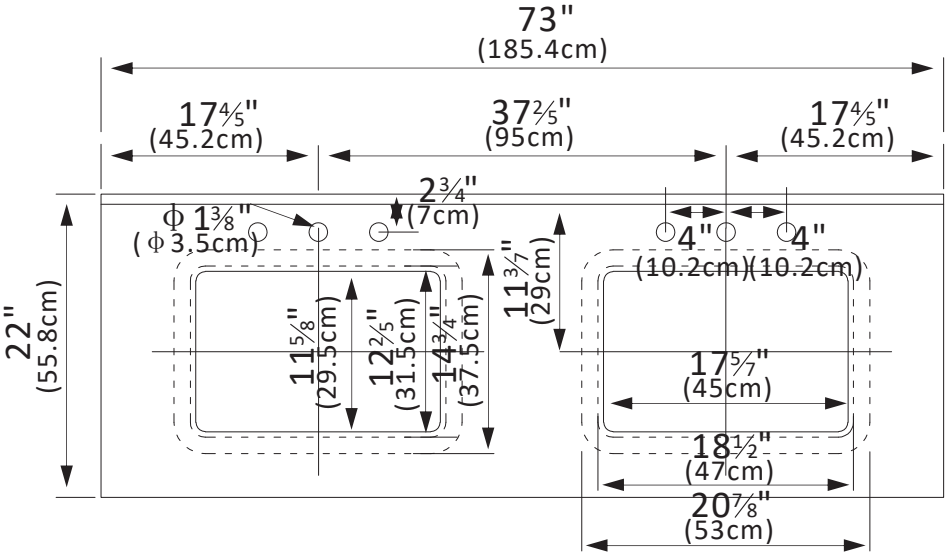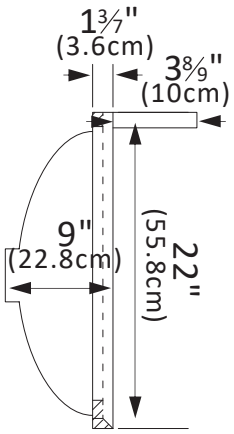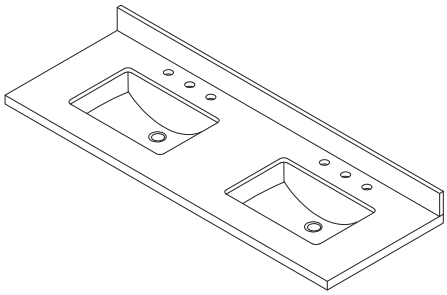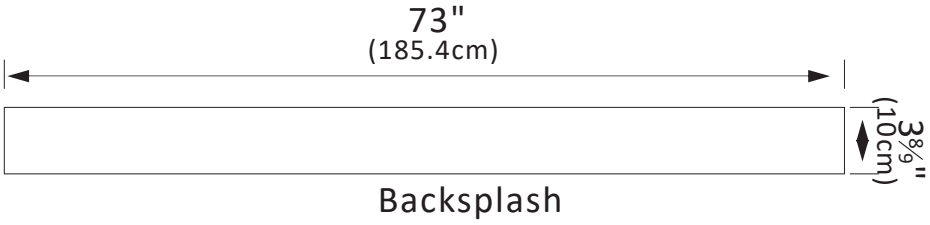
Bathroom Vanity Top