Jakarta Vanity Collection

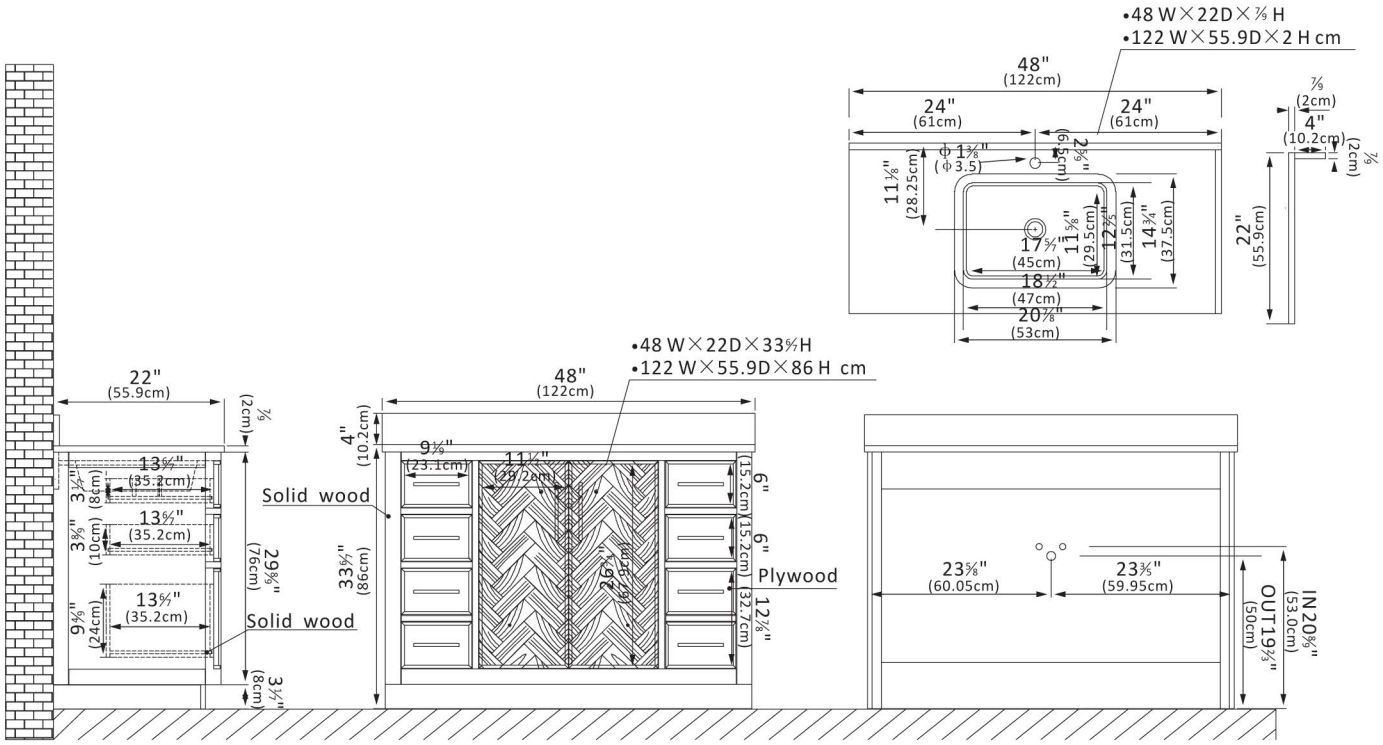

Features

●Durable Materials: Crafted from natural, imported solid wood for superior durability and long-lasting beauty.
●Stunning Finish: Available in an Oak Weathering Light Brown or Aged Dark Brown Oak finish to complement your décor, using environmentally friendly, water-based paint products.
●Ample Storage Space: Two soft-closing doors with the fixed shelf and six sturdy, soft-closing dovetail drawers offer plenty of space for all your toiletries. Built-in partitions in the drawer allow you to keep items neatly organized.
●High-Quality Hardware: Sturdy Matte Black or Brushed Gold handles offer a cool touch of style and contrast against the textured wood.
●Modern Top: The 0.8"-thick, silk white quartz stone top with 3.9" backsplash and sidesplash lends a fresh and contemporary look, with a high-gloss, anti-fouling coating that makes it scratch-resistant, wear-resistant, and easy to clean.
●Nano-Coated Basin: The ceramic undermount sink with overflow has a bright white Nano anti-fouling coating, and blends seamlessly with the stone vanity top.
●Practical Functionality: Built-in UL-listed power and USB outlets offer a practical way to power beauty and grooming appliances. Includes a convenient hair dryer organizer that keeps your favorite tool within easy reach.
●Faucet Type: Countertop has a pre-drilled, standard 1-3/8" faucet hole.
●Accessories: Does not include faucet, drain assembly, or P-trap.
●No Assembly Required: Freestanding bathroom vanity (without back panel) comes fully assembled for your convenience and ready to install. Designed for easy, no-hassle plumbing and faucet installation.
●Full Warranty: 1-Year Manufacturer Warranty—purchase with 100% peace of mind.
●Country of Origin: Vietnam