36 Mediterraneo cabinet
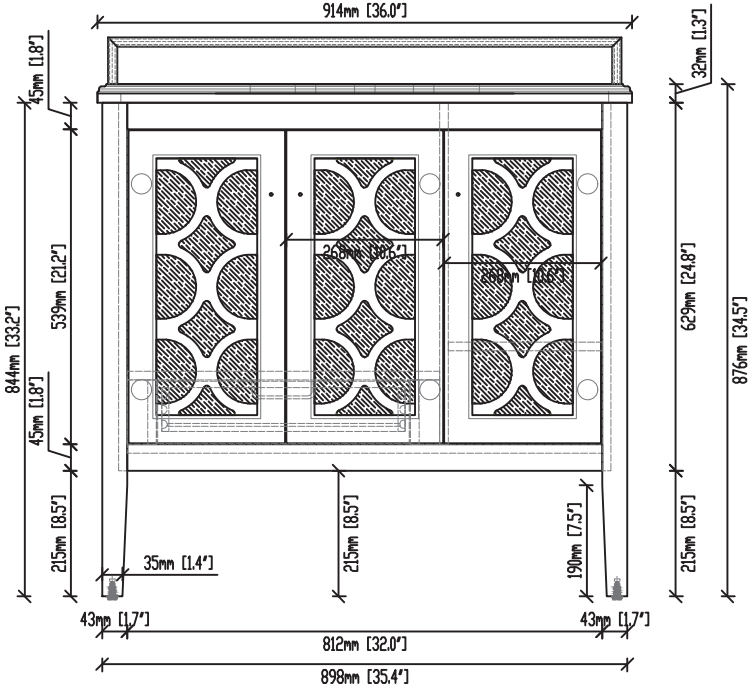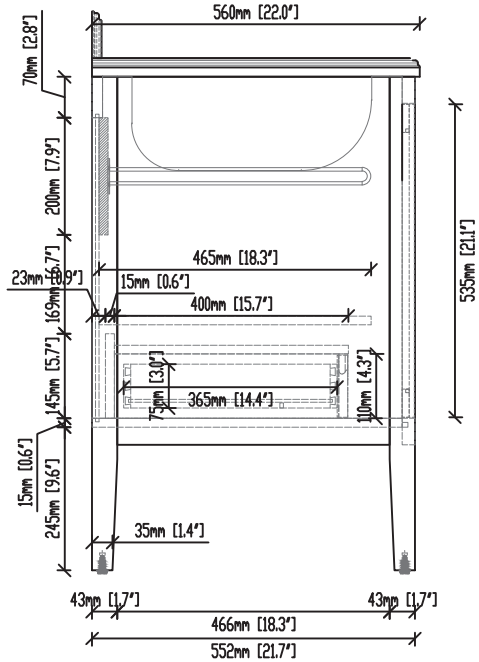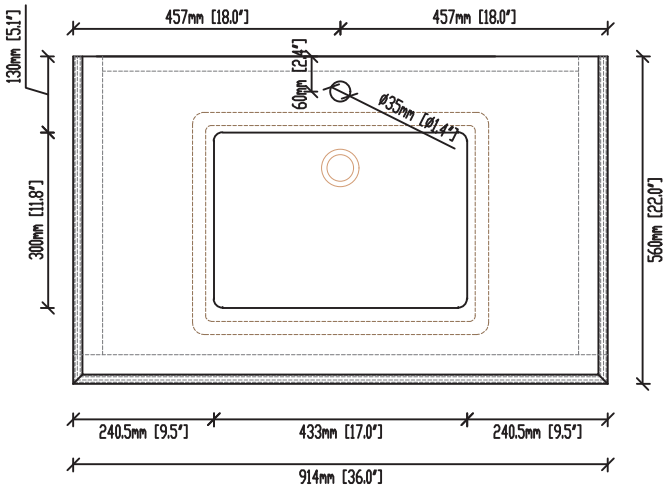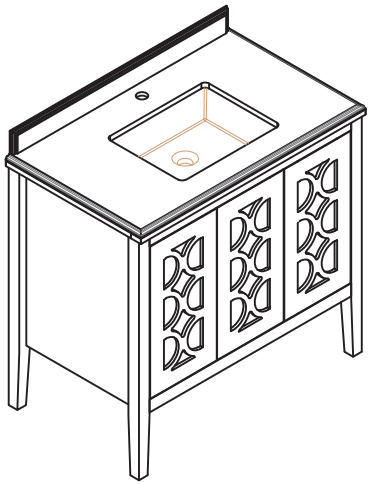
36”Wx22”Dx34.5”H