Villareal Vanity Collection 701636

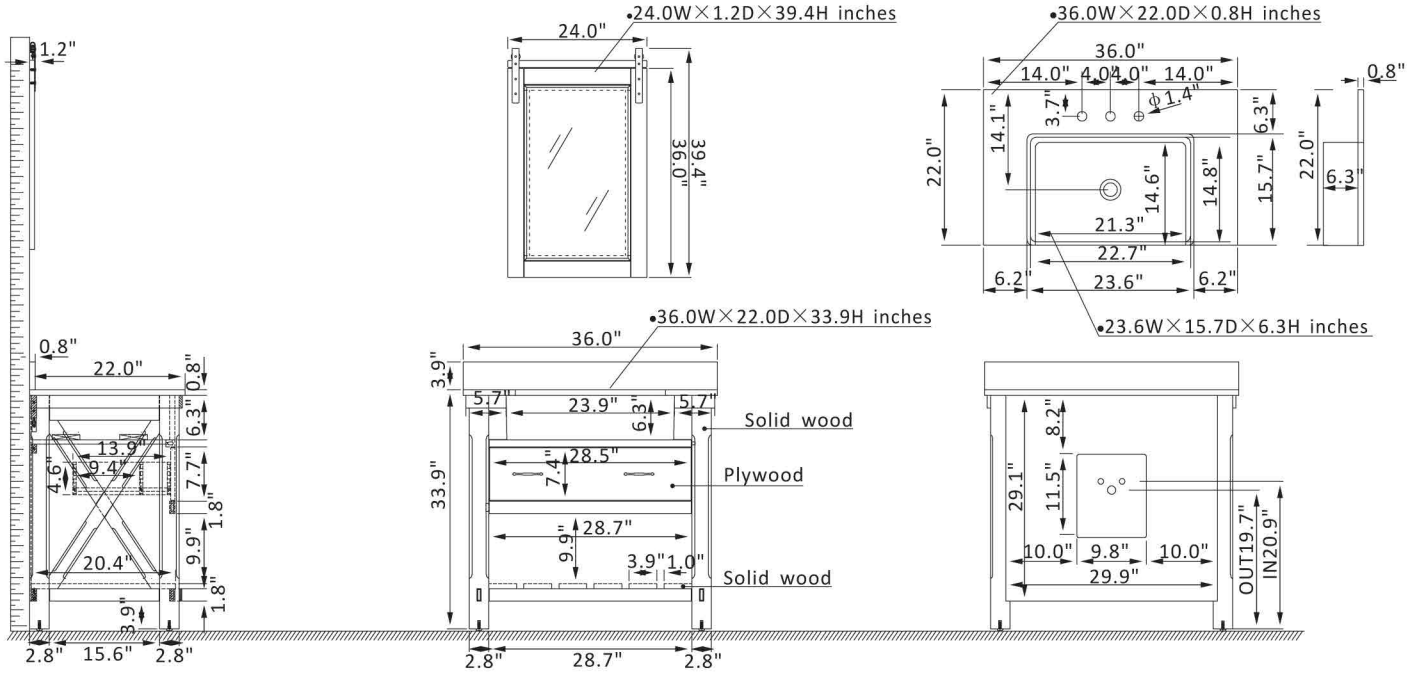

Features

Constructed of imported solid oak and plywood for superior durability and long-lasting beauty.
Available in beautiful Classical Grey or Weathered Pine finish to complement any room décor.
1 soft-closing, sturdy dovetail drawer with full extension glides provide spacious, concealed storage for toiletries and more.
0.8"-thick, composite White stone top lends a clean, elegant look, featuring 45-degree chamfered water retaining edges all around with backsplash.
Bright white, farmhouse-style sink has a deep basin and blends seamlessly with the stone vanity top.
Matte Black-finish hardware adds a touch of classic style and stunning contrast against the textured wood.
Lower open shelving provides ample room for storing rolled towels and displaying decorative items.
Single, rectangular, wood-framed mirror complements the farmhouse vanity style and ties it all together. (Mirror Option)
Countertop has pre-drilled, standard 8-inch widespread faucet holes without overflow.
Designed for easy, no-hassle plumbing and faucet installation.
Freestanding bathroom vanity (with back panel) comes fully assembled for your convenience.
1-Year Manufacturer Warranty—purchase with 100% peace of mind.
Vanity Dimensions:
701636-CR-GW/701636-WP-GW
Cabinet: 35.2"W x 21.6"D x 33.1"H
Top: 36"W x 22"D x 0.8"H
Overall Dimensions: 36"W x 22"D x 33.9"H
Basin Depth: 6.3"
All specifications are subject to change without prior notice.

* *Does not include faucet, drain assembly, or P-trap,comes fully assembled and ready to install in your bathroom.*