MCI36-4TM

36” x 22” Dual Basin Enameled Cast Iron Drop-in Kitchen Sink

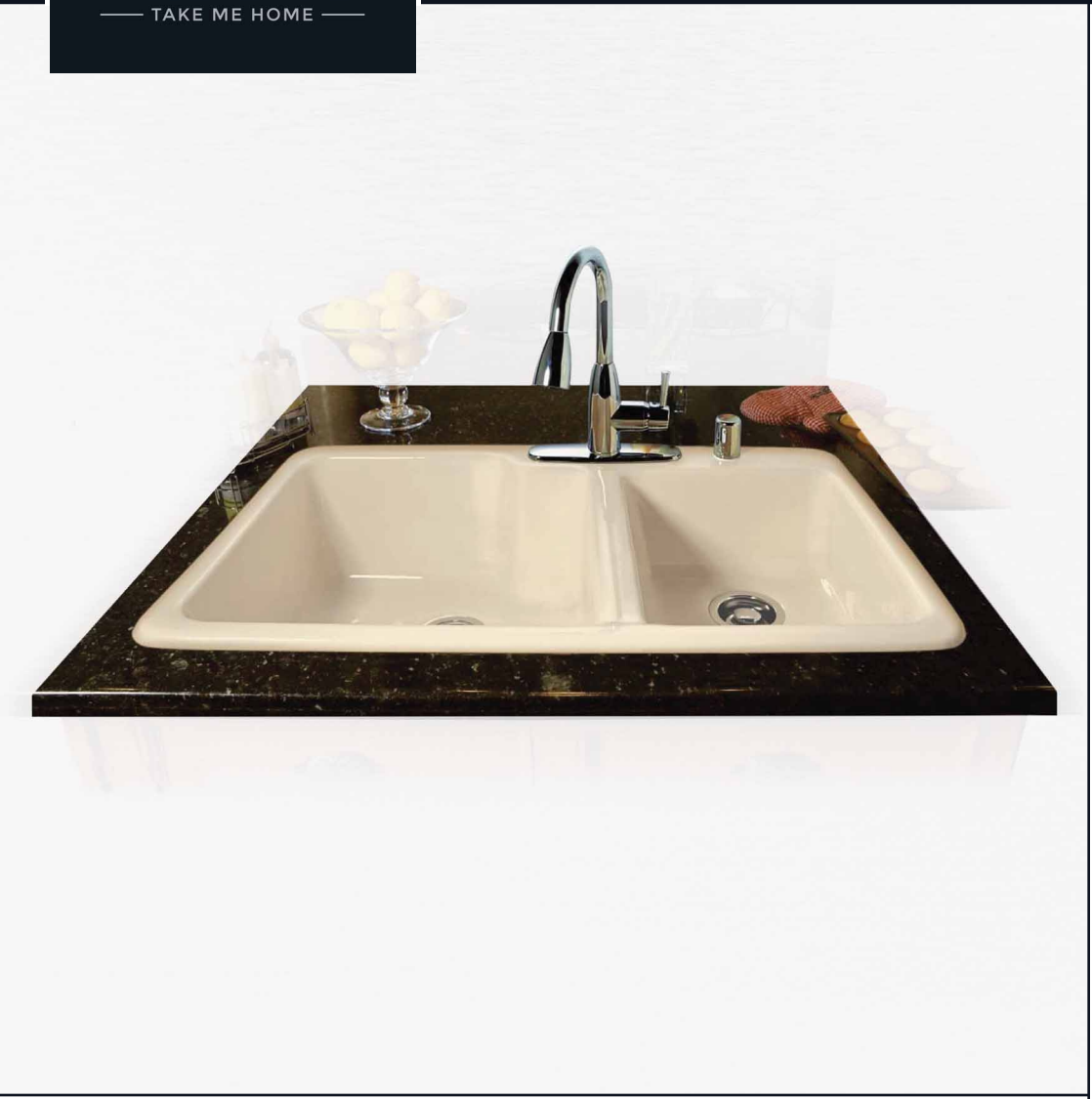

Available Finishes

BISCUIT ENAMEL
(MCI36-4TM-22)

BLACK ENAMEL
(MCI36-4TM-78)

WHITE ENAMEL
(MCI36-4TM-20)

Features

- Dual basins
- 60/40 basin split
- Rear drain locations
- Enameled cast iron construction
- Drop-in installation (top mount)
- Limited lifetime warranty

Optional Accessories

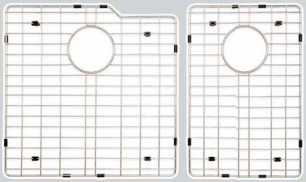

Basin Rack Set
736-STC

Specifications

- Left basin dim: 18”L x 18-1/2”W
- Right basin dim: 13”L x 16-1/2”W
- Left basin depth: 10”
- Right basin depth: 8”
- Drain openings: 3-1/2”
- Drain locations: Rear
- Material: Enameled Cast Iron
- Faucet holes: 4
- Installation type: Drop-in
- Number of basins: 2
- Weight: 124 lbs.

Not approved for commercial use

Installation Notes

- Thoroughly check sink for defects before installation (installation is not covered under warranty).
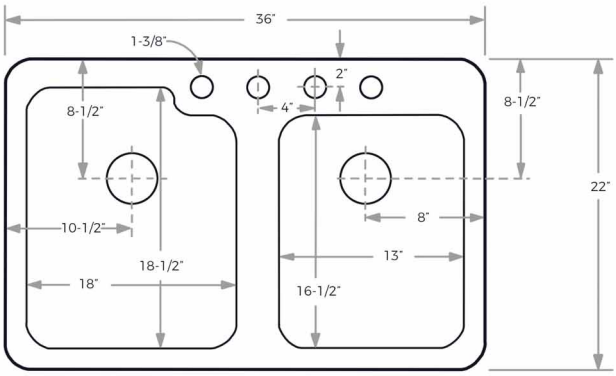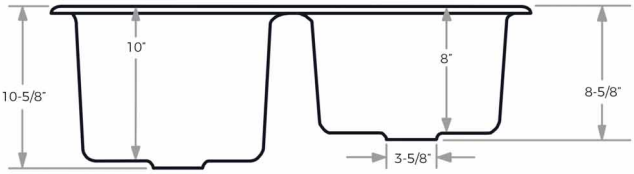
DIMENSIONS & MEASUREMENTS