Operating and installation instructions
Refrigerator-freezer combination

To avoid the risk of accidents or damage to the appliance it is **essential** to read the operating and installation instructions before it is installed and used for the first time.
In this way, you protect yourself and prevent damage to your device.

en - US, CA

M.-Nr. 10 605 980

Contents

IMPORTANT SAFETY INSTRUCTIONS 4
Guide to the Fridge-Freezer combination 8
Before use 10
Turning the appliance On/Off 10
Settings 11
Turning the button sound On/Off 12
Turning off for longer periods of time 13
Temperature and door alarm 14
Temperature alarm 14
Door alarm 14
Setting the temperature 15
Setting the temperature in the refrigerator and freezer sections 15
SmartFresh drawers 17
Storage temperatures 17
Humidity 17
Using the SmartFresh drawers 17
Using the refrigerator efficiently 20
Using the freezer efficiently 21
Freezing food 21
Defrosting 22
Cooling drinks quickly 22
SuperCool 23
Ice cube maker 24
Automatic defrost 25
Adjusting the interior fittings 26
Moving the shelves 26
Floating drawer 26
Removing the storage shelf from above the drawer 28
Ice cube container 29
Small freezer basket 29
Cleaning and care 30
Cleaning the interior and accessories 31
Appliance doors 31
Humidity filters 33
Ventilation slits 33
Door seals 33
Changing the light bulb 34

Water filter 36
Water filter change indicator 36
Exchanging the water filter 37
Confirming the filter change 38
Using an external water filter 38
Lead free certificate 41
Frequently asked questions 42
Noises 49
After sales service 50
Warranty 50
Caring for the environment 52
Installation 53
Climate Range 53
Installation site 53
Stainless steel panels 56
Installation options 56
Adjusting the door opening angle (optional accessory) 58
Dimensions 59
Installing the appliance 64
Before you begin 64
Preparing the installation niche 67
Sliding the appliance into the installation niche 71
Aligning the appliance 73
Attaching the appliance to the installation niche 74
Plumbing 77
Electrical connection 80
Contact details 87

IMPORTANT SAFETY INSTRUCTIONS

When using the appliance, follow basic safety precautions, including the following:

Read all instructions before installation and use to prevent accidents and machine damage.

This appliance is intended for residential use only. Use only as described in this Operating manual.

Only use the appliance for its intended purpose.

This appliance complies with current safety requirements. Improper use of the appliance can lead to personal injury and material damage.

Keep these operating instructions in a safe place and pass them on to any future user.

Electrical Safety

▶ Before installation, make sure that the voltage and frequency listed on the data plate correspond with the household electrical supply. This data must correspond to prevent injury and machine damage. Consult a qualified electrician if in doubt.

▶ Before installation or service, disconnect the power supply to the work area by unplugging the unit, "tripping" the circuit breaker or removing the fuse.

▶ Do not connect the appliance to the electrical supply with a power bar or extension cord. These are a fire hazard and do not guarantee the required safety of the appliance.

▶ Be certain your appliance is properly installed and grounded by a qualified technician. To guarantee the electrical safety of this appliance continuity must exist between the appliance and an effective grounding system. It is imperative that this basic safety requirement be met. If there is any doubt, have the electrical system of the house checked by a qualified electrician.

▶ Only connect power to the appliance when all installation and plumbing work is complete.

Installation

This appliance is top-heavy and must be secured to prevent the possibility of tipping forward. Keep the doors closed until the appliance is completely installed and secured per the installation instructions.

▶ This appliance must be installed and connected in compliance with the installation instructions.

▶ Installation and repair work should be performed by a Miele authorized service technician. Work by unqualified persons could be dangerous and may void the warranty.

▶ Installation must comply with local plumbing regulations and state laws.

▶ Do not operate any appliance with a damaged cord or plug, or if the appliance has been damaged in any manner. Contact Miele's Technical Service Department.

▶ This appliance must not be used in a non-stationary location (e.g. on a ship).

▶ Do not install the fridge/freezer in a room with too low an ambient temperature, e.g., a garage, as this may lead to the appliance switching off for longer periods so that it cannot maintain the required temperature.

▶ The ice cube maker is not suitable for connection to a hot water supply.

▶ In refrigerators with an automatic ice maker, avoid contact with the moving parts of the ejector mechanism, or with the heating element located on the bottom of the ice maker. Do not place fingers or hands on the automatic ice making mechanism while the refrigerator is plugged in.

▶ Do not use water that is microbiologically or chemically unsafe or of unknown quality without adequate disinfection or other treatment before or after the filter is used; the filter alone is not an adequate safeguard.

Use

▶ This appliance is not designed for commercial use. It is intended for use in domestic households and in similar working and residential environments such as:

– shops, offices and similar work environments

– by customers in hotels, motels, Bed & Breakfasts or similar residential environments.

▶ This appliance is not intended for outdoor use.

▶ Persons who lack physical, sensory or mental abilities, or experience with the machine should not use it without supervision or instruction by a responsible person.

▶ To reduce the risk of injury, do not allow children to play in, on or near the appliance, especially in the door hinge area.

▶ After your appliance is in operation, do not touch the cold surfaces in the machine, ice cubes or frozen food, particularly when hands are damp or wet. Skin may adhere to these extremely cold surfaces.

▶ Do not refreeze frozen foods which have thawed completely.

▶ Do not handle frozen food or ice with wet hands. Danger of injury.

▶ Do not store or use gasoline or other flammable vapors and liquids in the vicinity of this or any other appliance.

▶ Do not deactivate the water filter display.

▶ Do not use sharp-edged objects to remove frost and ice, or separate frozen foods and remove ice trays. They will damage the evaporator, causing irreversible damage to the appliance.

▶ Do not use defrosting sprays or de-icers, as they might contain substances which could damage the plastic parts or which could cause a build-up of gases and pose a danger to health.

▶ Do not use any oils or grease on the door seal, as these will cause the seal to deteriorate and become porous with time.

▶ Do not block the ventilation gaps in the plinth or the top of the appliance housing unit, as this can impair the efficiency of the appliance, increase the electricity consumption and cause damage to the appliance.

▶ Never use a steam cleaner to clean the appliance. Pressurized steam could damage electrical components and cause a short circuit.

The following applies to stainless steel appliances:

▶ Do not use sticky notes, transparent adhesive tape, masking tape or other types of adhesive on the coated surface of the appliance door. These will damage the surface, causing it to lose its soil resistant protective coating.

▶ The high-quality surface coating of the appliance door is susceptible to scratches. Even a magnet can cause damage.

California Proposition 65

– This product can expose you to chemicals including vinyl chloride, which is known to the State of California to cause cancer and birth defects or other reproductive harm. For more information go to www.P65Warnings.ca.gov.

Disposal of your old appliance

▶ Before disposing of an old appliance, first make the door latch or lock unusable.

▶ Take off the doors.

▶ Leave the shelves in place so that children may not easily climb inside.

▶ Consult with your municipal policy on recycling.

▶ Be careful not to damage any part of the pipework while awaiting disposal by:

- puncturing the refrigerant channels in the evaporator.
- bending any pipework.
- scratching the surface coating.

Splashes of refrigerant can damage the eyes.

▶ Your old refrigerator may have a cooling system that used CFCs (chlorofluorocarbons). CFCs are believed to harm stratospheric ozone.
If you intentionally release this CFC refrigerant, you can be subject to fines and imprisonment under provisions of environmental legislation. Make sure the CFC refrigerant is removed and disposed of by a qualified technician.

SAVE THESE INSTRUCTIONS

Guide to the Fridge-Freezer combination

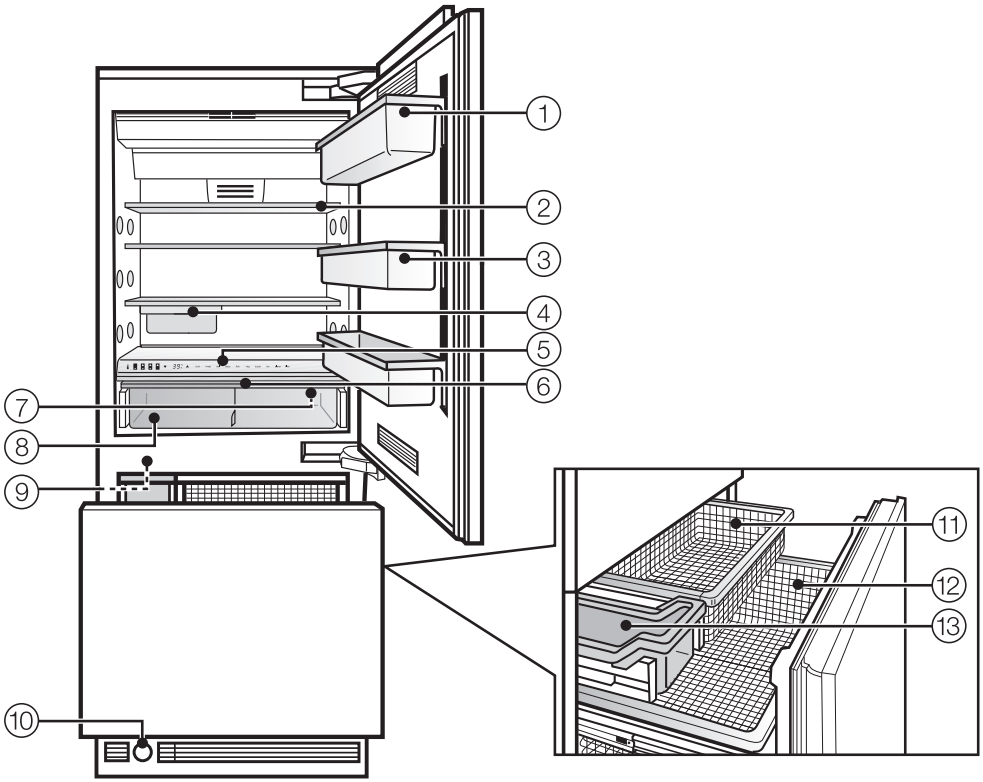

① Hinged door shelf

② Shelves (height adjustable)

③ Door shelves (height adjustable)

④ Floating drawer

⑤ Control panel

⑥ Humidity filter

⑦ Main switch to turn the appliance On/Off

⑧ SmartFresh drawer

⑨ Ice maker

⑩ Water filter

⑪ Small freezer basket

⑫ Large freezer basket

⑬ Ice cube container

Control panel

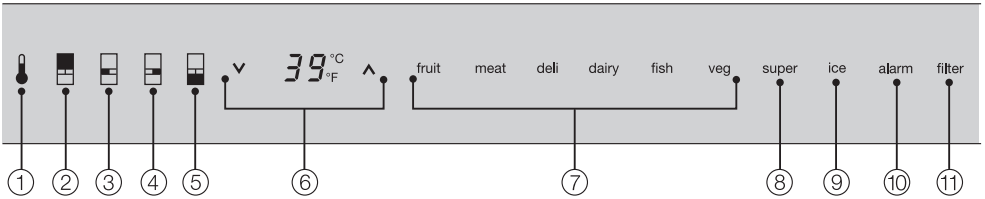

① Access button "🌡" activates the control panel

② Refrigerator

③ Left SmartFresh drawer

④ Right SmartFresh drawer

⑤ Freezer

⑥ Temperature display
∨ colder; ∧ warmer
Allows you to set the desired temperature in the refrigerator or freezer section

⑦ Food type(s) to be stored in the SmartFresh drawer
(left: high humidity
right: low humidity)

⑧ On/Off sensor button for the SuperCool function

⑨ On/Off sensor button for the ice cube maker

⑩ Sensor button for the temperature and door alarm*

⑪ Water filter change indicator*

* Only visible when the relevant function is activated

Before using for the first time

The stainless steel surface of the appliance is protected with a plastic film, which protects it during shipping.

Do not remove this protective film until the appliance has been completely installed.

- Clean the inside of the appliance and the accessories with a mild solution of warm water and liquid dish soap. Dry with a soft cloth.

If the appliance was transported or laid horizontally for any reason, allow it to stand vertical for at least 8 hours before turning it on. Failure to do so will affect the functioning of the appliance.

Turning the appliance On/Off

- Open the upper appliance door.

- Turn the appliance On/Off with the main switch.

The main switch is located on the right-side underneath the control panel.

All zones are switched on or off together.

Once on, the appliance begins cooling. When the doors are open, the interior lights come on.

The access button will light in the control panel.

The preset temperatures (factory default settings) are reached after a few hours. Do not put any food in the appliance until the preset temperatures are reached.

⚠ Turning off the appliance with the main switch does not safely isolate it from the power supply.

Using the settings

This appliance is operated with the use of touch keys activated by a finger.

– An available button will appear white.

– A selected button will appear yellow.

■ Touch the access button "🌡" so it turns yellow.

On the control panel you will now see the sensor buttons of the four appliance zones.

At the right of the control panel there is a sensor button to turn the ice maker on and off.

When the ice maker is in operation, the sensor button appears yellow.

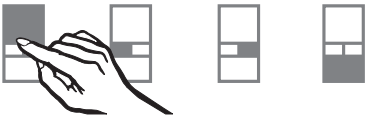

■ To change settings (e.g., to set the temperature, etc.), touch the sensor button for the appliance zone you wish to set.

The selected sensor button appears yellow and depending on the zone selected additional sensor buttons may appear on the control panel.

Depending on the zone selected, you can now:

– adjust the temperature,

– select the SuperCool function, or

– select settings for the SmartFresh drawers by food type, or

– turn on the ice cube maker.

For additional information, see the corresponding sections in this manual.

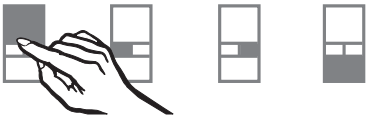

■ To de-select a zone touch the sensor button for that particular zone so that it turns white, or select another sensor button.

■ To leave the settings menu, touch the access button "🌡" so it turns white. The last settings entered are stored. If the access button is not pressed the display will go out after approx. 30 secs.

The sensor buttons for the four appliance zones now disappear from the control panel.

Custom settings

In the custom settings mode you can select and change functions. The function possibilities are described in the respective chapters of this manual.

Function	Display text
Temperature unit °C - °F (see "Setting the temperature")	t
Button sound on/off (see "Settings")	b
No function	h
To enter and exit the Settings mode	c

Turning the button sound On/Off

If you prefer the buttons to be silent when touched, the button sound can be turned off.

- Touch the access button "🌡" so it turns yellow.

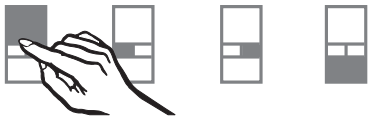

- Touch the sensor button for the refrigerator section so it turns yellow.
- Note the position of the ∨ button, but do not touch.
- Touch the access button "🌡" again so it turns white.

Only the access button "🌡" is visible.

- Place one finger on the position of the ∨ button and hold (the ∨ button will not be visible).
- While holding down the ∨ button, press the access button "🌡" once. Keep holding the ∨ button down until the following appears in the display (approx. 5 seconds).

- Tap the ∨ button until b appears in the display.
- Touch the access button "🌡" to confirm.

- By touching the ∨ button, you can choose between:
  b 0 : Button sound is off
  b 1 : Button sound is on
  b – : Return to menu.
- Touch the access button "🌡" to confirm the setting.
- Tap the ∨ button until you see c in the display.
- Touch the access button "🌡".

You have now left the Custom settings mode.

When you are in the Custom settings mode the door alarm is turned off automatically. Once the door is closed it is reactivated.

Turning off for longer periods of time

If the appliance is not going to be used for an extended time (for example, during a vacation) some precautions should be taken.

- Shut off the water supply line, (several hours before switching off the appliance)
- Take all food out of the appliance
- Turn the appliance off at the main switch
- Unplug the appliance
- Empty the ice cube container
- Clean the interior
- Remove and discard the water filter (secure the filter cap)
- Leave the doors open to prevent odors

Temperature and door alarm

The appliance is equipped with an alarm system, to ensure that the temperature does not rise unnoticed because of energy loss or open doors.

> The alarm system is always operational, it does not need to be turned on.

Temperature alarm

If the temperature becomes too warm, an alarm sounds, the "alarm" indicator turns red and flashes. At the same time the affected zone flashes in the display.

If the freezer zone is affected, the temperature display shows the warmest temperature reached during the alarm.

The alarm will sound and the display will flash if:

- too much warm air flows into the appliance, for example when food is being loaded, re-arranged, or taken out.
- large amounts of food are being frozen at once.
- the power fails.

Turning the temperature alarm Off

As soon as the alarm condition is corrected, the alarm signal turns off and the affected zone stops flashing in the display. The "alarm" indicator goes out.

- **To turn the alarm off early**, press the "alarm" sensor button.
  The alarm signal turns off. The "alarm" indicator remains red and the corresponding appliance zone continues to flash until the alarm condition is corrected.

> If the temperature in the freezer zone reaches 0°F (-18°C) or higher, check that food has not defrosted.

Door alarm

If one of the appliance doors is left open for over 5 minutes, an alarm signal will sound and the "alarm" indicator will turn red.

Turning the door alarm Off

Once the door is closed the alarm turns off and the "alarm" indicator goes out. If the door has not been closed properly, the alarm will sound again after five minutes.

- **To turn the alarm off early**, press the "alarm" sensor button. The "alarm" indicator and signal will turn off.

Setting the temperature in the refrigerator and freezer sections

The refrigerator and freezer sections can be set independently of each other.

- Touch the access button "🌡" so it turns yellow.

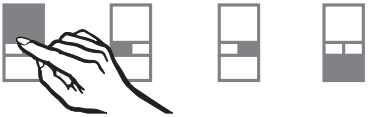

- Touch the sensor button for the refrigerator or freezer section so it turns yellow.

- Use the ∨ and ∧ buttons next to the temperature display to set the temperature warmer or colder.

Tap the ∨ and ∧ sensor buttons to raise/lower the temperature 1°, or hold them down to move through the temperature range more quickly.

> The temperature display on the control panel always shows the **desired** temperature.

When you have adjusted the temperature, wait for approx. 6 hours if the appliance is not very full and for approx. 24 hours if the appliance is full before checking the temperature, as it will take this long for the appliance to reach the temperature. If, after this time, the temperature is still too high or too low, you will need to adjust it again.

Temperature range

The temperature can be selected within the following ranges:

– Refrigerator:
  36°F to 46°F (2°C to 8°C)

A temperature of 37°F (4°C) in the refrigerator section is recommended.

– Freezer:
  7°F to -11°F (-14°C to -24°C).

To freeze fresh food and store frozen food for an extended period of time, a temperature of 0°F (-18°C) is suggested.

The room temperature and the installation location can affect the time it takes for the appliance to get to the desired temperature. If the room temperature is too high, it may not be possible for the appliance to reach the lowest temperature.

Temperature unit (Fahrenheit/Celsius)

The temperature can be displayed in degrees Fahrenheit (°F) or Celsius (°C).

- Touch the access button "🌡" so it turns yellow.

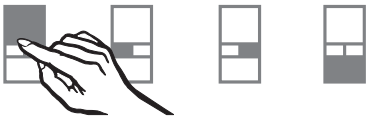

- Touch the sensor button for the refrigerator section so it turns yellow.
- Note the position of the ∨ button, but do not touch.
- Touch the access button "🌡" again so it turns white.

Only the access button "🌡" is visible.

- Place one finger on the position of the ∨ button and hold (the ∨ button will not be visible).
- While holding down the ∨ button, press the access button "🌡" once. Keep holding the ∨ button down until the following appears in the display (approx. 5 seconds).

- Tap the ∨ button until ⊢ appears in the display.
- Touch the access button "🌡" to confirm.
- By touching the ∨ button you can select either Fahrenheit or Celsius for the temperature display.
  ⊢ 0: Fahrenheit
  ⊢ 1: Celsius
  ⊢ –: return to menu
- Touch the access button "🌡" to confirm the setting.
- Tap the ∨ button until a c appears in the display.
- Touch the access button "🌡".

You have left the Custom settings mode.

> When you are in the Custom settings mode the door alarm is turned off automatically. Once the door is closed it is reactivated.

The SmartFresh drawers provide the right combination of temperature and humidity. The result is freshness up to three times longer than in the other zones of the refrigerator.

Storage temperatures

For fresh foods that are not adversely affected by cold, the best range is 32° - 37°F (0° - 3°C). This helps to keep the food fresh considerably longer than in the rest of the refrigerator, spoiling is minimal.

Humidity

The level of humidity in the SmartFresh drawers is dependent on:

– the moisture content of the stored food, and

– the quantity of food stored.

The closer the humidity in the appliance matches the moisture content of the food, the more moisture the food will retain, and the fresher and crisper it will stay over a longer period of time.

Using the SmartFresh drawers

There are two SmartFresh drawers.

■ Use the respective sensor button to select the desired drawer.

– Left: Foods that are best stored under humid conditions, such as vegetables and fruit

– Right: Foods that are best stored under dry conditions, such as meat, fish and dairy products

fruit meat deli dairy fish veg

The selected sensor button turns yellow, and the symbols for the food choices appear.

■ Use the sensor buttons to select the desired food type(s).

■ To delete a food type, simply touch the sensor button again.

Please note that you cannot select foods that require humid conditions and foods that require dry conditions at the same time. But several food types within one group can be selected at the same time.

■ Place the food in the SmartFresh drawer.

For optimal storage conditions, it is always best to store similar foods together in one crisper.

Foods that are best stored under dry conditions

– fresh fish and shellfish, meats, poultry, sausage, dairy products and deli salads.

Foods that are best stored under moist conditions

– fresh produce, e.g., vegetables, lettuce, herbs, mushrooms, cabbage, fruit.

Remember that higher moisture levels can only be attained when the food is stored **unpacked so air can circulate freely**.

Foods that are best stored under dry conditions:

– fresh fish and shellfish, meat, poultry, sausage, dairy products and deli salads.

Please note that foods rich in protein deteriorate faster than others. Shellfish, for example, deteriorates faster than fish, and fish deteriorates faster than meat.

Always keep these foods **covered or wrapped**.
Exception: Meat (The surface of the meat dries out slightly, slowing the growth of bacteria so the meat lasts longer. Do not let one type of meat come into direct contact with another type; always keep them in separate packages. This prevents premature deterioration of the meat through bacterial cross-contamination).

Take food out of the SmartFresh drawer approx. 30-60 minutes before using it. The flavor and taste do not fully develop until the food has reached room temperature.

Important: If the divider is not in place, the function of the SmartFresh drawers is impaired!

If you are not satisfied with your stored food (for example the food wilts or becomes withered after only a short storage time), check the following again:

- Store only fresh food. The initial condition of the food is most important for maintaining freshness.
- Before storing food, clean the SmartFresh zone.
- Very moist food should be dried off before storing it.
- Do not store cold-sensitive food in the SmartFresh zone.
- Remember that not all foods can be stored together.
- For optimal storage conditions, it is always best to store similar foods together in one drawer (for humid or dry storage).
- The food in the humid SmartFresh drawer should be stored unwrapped. A high humidity in the SmartFresh zone is created solely by the moisture in the stored food. If the humidity level is not high enough, for example when not enough food is stored, the humidity level can be raised with a damp sponge..
- If you feel that the temperature in the SmartFresh zone is too high or too low, try to adjust it by raising or lowering the temperature in the refrigerator by 1 to 2 °C. Make sure that ice crystals do not form on the bottom of the SmartFresh zone; if this happens the temperature must be increased, otherwise the food will be damaged by the cold.
- Do not allow water to collect on the bottom of the SmartFresh zone, use a cloth to dry it. If necessary, wipe food dry before storing it, or put a grill on the bottom of the SmartFresh zone so that the moisture can drain off.

Different storage zones

Due to the natural circulation of air in the appliance, there are different temperature zones in the refrigerator. Cold, heavy air sinks to the lowest section of the appliance. Make use of these different zones when placing food in the appliance.

This appliance uses a dynamic cooling feature to establish a constant temperature during cooling. As a result, the differences between temperature zones are less pronounced.

Warmest area

The warmest area is in the top section of the door (storage shelf). Use this area to store items such as butter and cheese.

Coldest area

The coldest area in the refrigerator is directly above the SmartFresh drawers. The temperature in the drawers themselves is even colder.

Use these cold areas in the refrigerator for all highly perishable foods, such as:

- fish, meat, poultry,
- deli meats, store-bought meals,
- dishes or baked goods containing eggs or cream,
- fresh bread dough, pastry dough, cake batters,
- dairy products,
- plastic-wrapped vegetables and other fresh food whose best-before date requires storage at a temperature of at least 4°C.

Do not store explosive materials in the appliance or any products containing propellants (e.g. spray cans). Danger of explosion.

If storing high-proof alcohol, make sure it is tightly closed and stored upright.

Do not store cooking oil in the refrigerator door. Traces of oil can cause stress cracks to occur in the plastic components in the door.

Do not allow food to touch the rear wall of the appliance, it may freeze to the wall.

To allow air to circulate efficiently, do not pack food too closely together in the refrigerator. Do not cover the fan in the rear wall of the refrigerator, as this is essential for keeping the appliance cool.

Freezing food

Fresh food should be frozen as quickly as possible. This helps maintain the nutritional value, vitamin content, appearance and taste of the food.

Never refreeze partially or fully defrosted food. Consume defrosted food as soon as possible, it will lose its nutritional value and spoil if left for too long. Do not refreeze defrosted food unless it has been cooked.

Before placing food in the freezer

- When you are planning to freeze large amounts of food (more than 4 ½ lbs [2 kg]), switch on the SuperCool function ahead of time (see "SuperCool").
  This will provide the food already in the freezer with a protective boost of cold air.

Placing food in the freezer

Food to be frozen can be placed anywhere in the freezer section.

Use the large freezer basket for large quantities of food.

Load bearing capacity of the baskets:

	Small basket	Large basket
KF 18X Vi/SF	30 lbs (14 kg)	72 lbs (33 kg)
KF 19X Vi/SF	41 lbs (19 kg)	94 lbs (43 kg)

- Spread the food to be frozen across the bottom of the freezer basket or across the shelves, so that it will freeze through to the core as quickly as possible.
- When placing items in the freezer, make sure the packaging and containers are dry, to keep them from sticking together when frozen.

When freezing, make sure that already frozen food does not come into contact with fresh food being frozen, this could cause the frozen food to defrost.

Defrosting

Frozen food can be defrosted in different ways:

- in a microwave oven,
- at room temperature,
- in the refrigerator (the cold given off by the frozen food helps to keep the other food cold),
- in a steam oven.

Poultry It is especially important to observe proper hygiene when defrosting poultry. Never save the liquid from defrosted poultry. Drain it away and promptly wash the container, the sink and your hands. Danger of salmonella poisoning.

Fruit should be defrosted at room temperature in its packaging, or in a covered bowl.

Most vegetables can be cooked while still frozen. Simply place directly into boiling water or hot oil.

Cooling drinks quickly

To cool drinks quickly, switch on the SuperCool function. See "SuperCool" for more information.

Do not leave bottles in the freezer for more than **1 hour**, closed containers could burst.

When the SuperCool function is activated, the appliance is cooled as quickly as possible (to a factory-preset temperature).

SuperCool

When used with the **refrigerator** the SuperCool function is ideal for the rapid cooling of drinks and refrigerating large quantities of food.

When used with the **freezer** the SuperCool function is ideal for freezing large quantities of unfrozen food. The function should be switched on **4-6 hours** before the fresh food is placed in the freezer.
If the max. freezing capacity is used, **24 hours** are recommended.
This helps food to freeze quickly and retain its nutrients, vitamins, flavor and appearance.

Switching on SuperCool

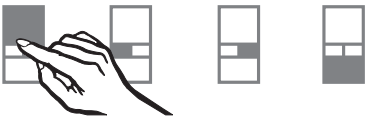

- Touch the sensor for the refrigerator or freezer (as desired) so it turns yellow.

- Touch the SuperCool sensor button so it turns yellow.

In the temperature display for the zone selected, the new temperature setting appears:

Refrigerator: 35°F (2°C)
Freezer: -22°F (-30°C)

The temperature in the appliance now begins to fall, with maximum cooling in the zone selected.

Switching off SuperCool

The SuperCool function automatically switches off after:
Refrigerator: approx. 6 hours
Freezer: approx. 52 hours
The sensor button turns white, and the appliance continues running at normal power.

To save energy, the SuperCool function can be switched off early, once the food and/or drinks are sufficiently chilled.

- Touch the SuperCool sensor button so that it turns white.

The temperature display for the zone selected returns to the original temperature setting.

The appliance now continues running at normal power.

For the automatic ice cube maker to operate, it must be connected to the household water supply. See "Plumbing".

Turning on the ice cube maker

- Make sure that the ice cube container is under the ice cube maker, as far as possible.

Ice cubes will not be produced unless the container is completely closed.

- Touch the sensor button for the ice cube maker so that it turns yellow.

As soon as the freezer has cooled to a freezing temperature, the ice cube container fills with water. Cold air is blown directly over the container.

As soon as the ice cubes are frozen, they fall into the ice cube container.

The ice cube maker can produce approx. 140 ice cubes within 24 hours. **Note:** Ice production will vary due to your water source temperature, pressure and hardness.

The production volume of the ice depends on the temperature in the freezer. The lower the temperature the more ice cubes produced.

After the appliance is turned on for the very first time, it can take up to 10 hours for the first ice cubes to drop out of the ice cube maker and collect in the container.

Once the ice cube container is full, the ice cube maker switches off automatically.

Do not use the ice cube container for rapid cooling of food or drinks. The ice cube maker may become blocked and be damaged.

Do not use the first three containers of ice cubes from the ice cube maker.
Discard the ice produced in the first 24 hours after switching on the ice cube maker.
This applies for the very first use, and whenever the appliance has been out of service for an extended period of time.

The amount of ice cubes produced depends on the temperature in the freezer section. The lower the temperature, the more ice cubes will be produced in a given period of time.

Turning off the ice cube maker

The water supply line must be shut off several hours before the appliance or ice cube maker is switched off.

- Touch the sensor button for the ice cube maker so that it turns white.

Refrigerator section and SmartFresh drawers

The refrigerator and SmartFresh drawers defrost automatically.

During normal operation, condensate and frost can form on the rear wall of the refrigerator and drawers.
You do not need to remove this build-up, it will defrost and evaporate automatically with the heat generated by the appliance.

Freezer section

The freezer section defrosts automatically.

The moisture generated in the appliance collects in the evaporator. It is automatically defrosted and dissipated by the condenser periodically.

This automatic defrosting system enables the freezer to remain permanently ice-free, while ensuring that the food stored in the freezer stays frozen.

Moving the shelves

The shelves can be adjusted according to the height of the food.

- Using both hands, grasp the shelf from underneath and lift slightly so that the rear of the shelf is slightly above the mountings.
- Pull the shelf forward.
- Move the shelf to the desired height, then insert the (rear) hooks into place.
- Make sure the shelf is level.

Floating drawer

The floating drawer can be moved to the left or right, moved to another shelf, or removed.

- Pull the drawer straight out, so that it passes over the catches and remove.
- To replace the drawer slide it straight in along the rails.

SmartFresh drawer

These drawers are set on telescopic tracks. They can be pulled in and out for loading and unloading, or removed for cleaning.

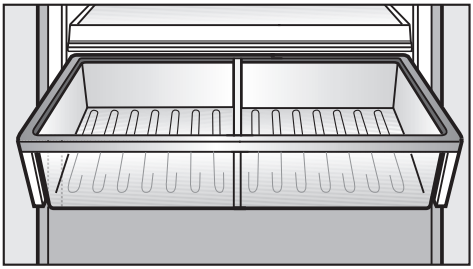

- Open the drawer.

On the hinged-side of the door is a safety lock, which must be turned to a horizontal position before the drawer can be removed.

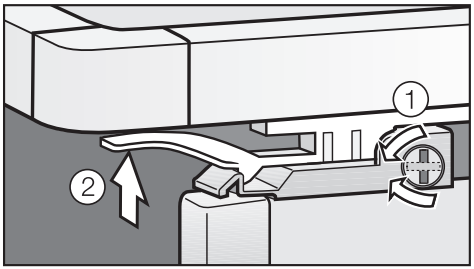

- Using a suitable object, e.g., coin, turn the safety lock to a horizontal position ①.
- On both sides of the drawer, pull the latches ② upward and lift the drawer out of the refrigerator.

Push the tracks back into the refrigerator to avoid injury.

The divider in the drawer can also be removed for cleaning.

- Remove the drawer.
- Lift the divider upward and out.

To re-insert the divider, slide it back down along the tracks.

Important: If the divider is not in place, the SmartFresh drawer will not work properly.

Replacing the SmartFresh drawer

- Completely extend the telescopic tracks.
- Lay the drawer on the tracks so that it connects in the front and back.
- Turn the safety lock back to the vertical position.
- Slide the drawer in.

Adjusting the door shelves

For easier loading, unloading, and cleaning, the door shelves can be shifted or completely removed.

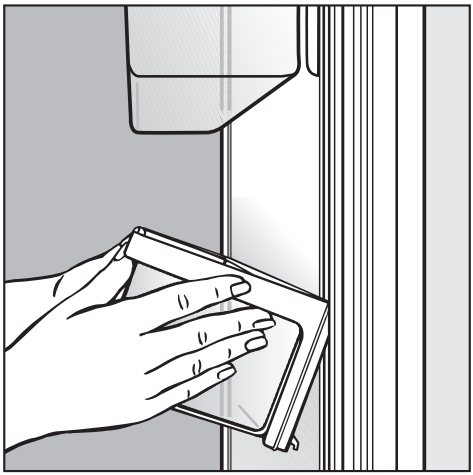

- Using both hands, grasp the door shelf by the frame and tip it slightly forward.
- Slide the tipped shelf up or down along the slide-rails, and click it into place with the lower hooks.
- Make sure the shelf is level.

Removing a door shelf

- Slide it upward all the way to the top of the slide-rails, until it can be removed.

Replacing a door shelf

- Start at the top of the slide-rails and slide the shelf down into the desired position.

Removing the hinged door shelf

- Pull the stops upward and out of the shelf, and remove the shelf lid upward.
- Now remove the hinged container upward and out.

Removing the storage shelf from above the drawer

- Remove the rear finishing strip, move the glass plate slightly toward the rear, and carefully lift it upward and out.

Ice cube container

The ice cube container is set on telescopic tracks, and can be removed for loading, unloading and cleaning.

- Slide the container forward until resistance is felt.
- On both sides of the container, pull the latches (see arrow) upward and lift the container out of the freezer.

Push the tracks back into the freezer to avoid injury.

Replacing the ice cube container

- Completely extend the telescopic tracks.
- Lay the container onto the tracks so that it connects in the front and back.
- Slide the container in.

Small freezer basket

The small freezer basket can be removed for cleaning.

- Slide the basket forward until resistance is felt.

On the hinged-side of the door is a safety lock, which must be turned to a horizontal position before the drawer can be removed.

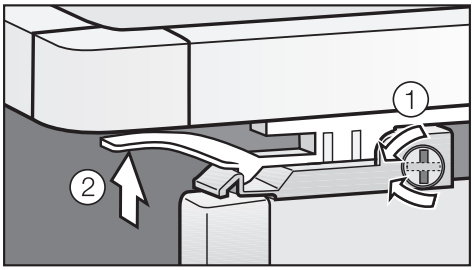

- Using a suitable object, e.g., coin, turn the safety lock to a horizontal position ①.
- On both sides of the basket, pull the latches ② upward and lift the basket out of the freezer.

Replacing the small freezer basket

- Fully extend the telescopic tracks.
- Lay the basket onto the tracks so that it connects in the front and back.
- Turn the safety lock back to the vertical position.
- Slide the freezer basket in.

Replacing the large freezer basket

- Place the basket into the freezer, making sure it is seated correctly in the connection holes.

To reduce the risk of electrical shock, disconnect the appliance from the power supply by shutting off the power main, tripping the circuit breaker or unplugging the power cord before maintenance.

Never use cleaning agents containing abrasive substances such as sand, soda, acids, chlorides or chemical solvents. Non-abrasive cleaning agents are also unsuitable, as they can cause matte areas to appear.

Only use a mild solution of warm water and liquid dish soap to clean this appliance.

Do not use a steam cleaner to clean this appliance. Pressurized steam could penetrate electrical components and cause a short circuit.

Do not allow water to get into the electronic unit or lights.

The data plate located inside the appliance must not be removed. It contains information which is required in the event of a service call.

To better maintain your appliance avoid the following:

- cleaners containing soda, ammonia, thinners, or chlorides
- solvent based cleaning agents
- stainless steel cleaners
- cleaners containing descaling agents or lime removers,
- abrasive cleaners,
- dishwasher soap (powder),
- caustic (oven) cleaners,
- scouring pads, steel wool, hard brushes,
- glass cleaners,
- metal scrapers,
- eraser sponges,
- steam cleaning products.

Glass cleaners may be used to clean the exterior. However **do not** allow them to sit or "puddle", this can cause damage to the surface. **Remove the cleaner promptly.**

The stainless steel doors have a special coating that is soil-resistant. **Do not** wipe these with a stainless steel conditioner, it will leave visible streaks.

Before cleaning

- Use the main switch to turn the appliance off completely.

The main switch is located on the right side underneath the control panel.

- Unplug the power cord.
- Remove any food from the appliance and store it in a cool place.
- Take out any removable parts, e.g., shelves.

Cleaning the interior and accessories

Use a mild solution of warm water and liquid dish soap. Wash all accessories and drawers by hand. Do not wash in a dishwasher.

- Clean the appliance as needed.
- After washing, wipe down the interior and accessories with a clean wet cloth, then dry with a soft cloth. Leave the appliance doors open for a short time, so the moisture can evaporate.

Appliance doors

Remove soiling on the appliance doors and side walls right away. If soiling is left on, it may become diffficult to remove and the surfaces may discolor.

All surfaces are susceptible to scratches. All surfaces may become discolored when they come into contact with unsuitable cleaning materials.

- Clean the surface with a soft sponge, liquid dish soap and warm water. A clean, damp microfiber cloth may also be used, without a cleaning agent.
- After cleaning, rinse everything with clean water, then dry with a soft cloth.

Additional instructions for stainless steel appliances:

– **Appliance doors**

The appliance doors are finished with a high-quality surface coating. It protects them from soiling and makes cleaning easier.

Do not treat appliance doors with stainless steel cleaning agents: This will damage the coating!

Aluminum frames

The shelf frames are made of aluminum.

■ Clean the frames with a mild solution of warm water and liquid dish soap.

Aluminum is susceptible to scratches and nicks, treat with care.

The aluminum frames may become discolored or otherwise altered if soiling is not cleaned away promptly.

Do not use stainless steel cleaners; lime removers; scouring pads, such as pot scrubbers; or used sponges that still contain abrasive cleanser residue to clean the frames.

Humidity filters

The two humidity filters, located above the SmartFresh drawers, must be removed for cleaning.

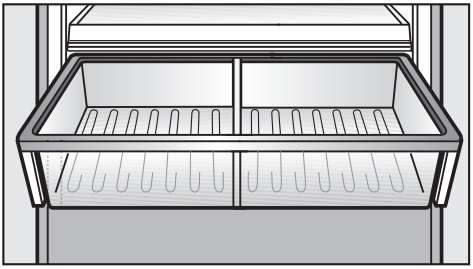

- Remove the SmartFresh drawer.

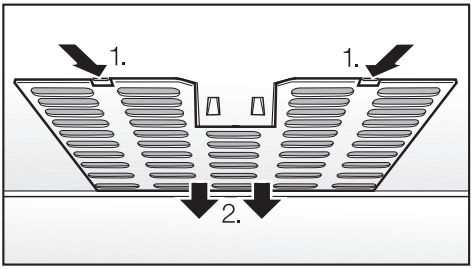

- Unhook the filter cover, **1.** in each side of the drawer and remove them along with the filter mat downwards starting from **2**.

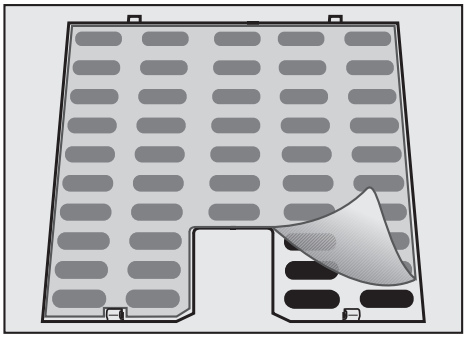

- Remove the filter mat.
- Clean the filters by rinsing them with lukewarm water.

> Do not clean in a dishwasher or washing machine. This will damage the filter.

- Air-dry the filters.
- Place the filters back in the filter cover.
- Put the filter cover back in place, inserting the rear hooks first.
- Re-insert the SmartFresh drawer.

Ventilation slits

- Check the ventilation slits in the base panel regularly. Remove any dirt/dust with a vacuum cleaner or brush. Clean as needed.

Door seals

> Do not use oil or grease on the door seals. This may cause the seals to deteriorate and become porous over time.

- Clean the door seals with warm water and dry thoroughly.

After cleaning

- Return all shelves and accessories.
- Place food back in the refrigerator section, close the appliance doors, insert the plug in the power outlet and turn the appliance on.
- Switch on the SuperCool function for the freezer section. The freezer section will cool down quickly.
- Once the temperature in the freezer section is cold enough, place food in the freezer baskets and return them to the freezer.

Changing the light bulb

The lighting automatically switches off after the door has been open for approx. 5 minutes. This is not a fault.

After the bulb has cooled for a short time it will turn on again.

If the light does not come on when the door is opened briefly, the light bulb should be changed.

- Use the main switch to turn the appliance off.

To reduce the risk of electric shock, disconnect the appliance from the power supply by unplugging or tripping the circuit breaker.

Upper lighting

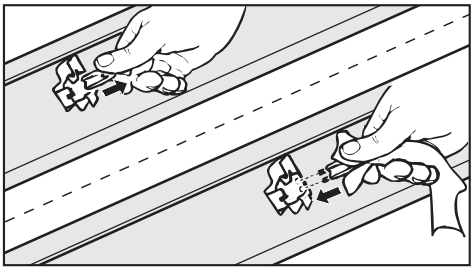

- Grasp the front of the light cover with both hands, and slide it back.
- Carefully pull the cover forward and out.

Never touch a halogen bulb with bare fingers.
When inserting a glass halogen bulb always hold it with a soft cloth.

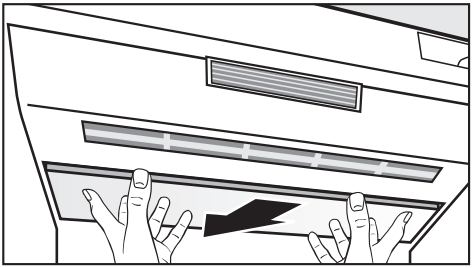

- Remove the defective light bulb.
- Place the new bulb in the socket.
  Halogen bulb type:
  20 W/12 V/socket GY 6.35.
- Slip the rear of the light cover back into position, then pull it forward and into place.

Side lighting

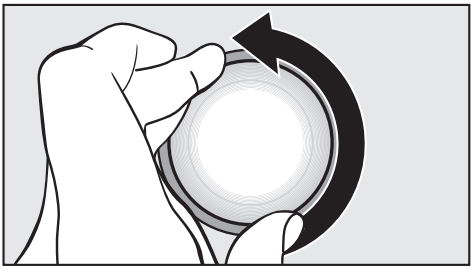

- Turn the light cover counterclockwise and pull out.

Never touch a halogen bulb with bare fingers.
When inserting a glass halogen bulb always hold it with a soft cloth.

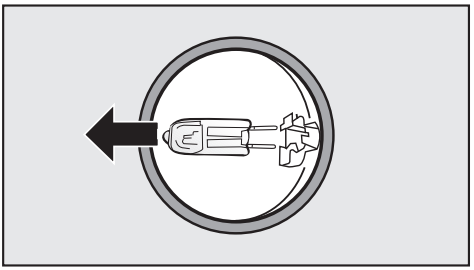

- Pull the defective light bulb from the socket.
- Place the new bulb in the socket.
  Halogen bulb type:
  5 W/12 V/socket G 4.
- Put the light cover back on and turn clockwise into place.
- Restore power to the appliance.

Water filter

The appliance is supplied with an active charcoal filter which improves the taste and smell of ice cubes by removing chlorine and other substances from the incoming tap water.

Additional water filters are available from Miele.

It is important to change the water filter regularly.

To avoid serious illness or death, do not use water that is microbiologically or chemically unsafe or of unknown quality without adequate disinfection or other treatment before or after use of a filter.

Note:

– After installing a new water filter and switching on the ice maker, discard the first 24 hours' worth of ice production.

– If the ice maker has not been used for a prolonged time discard any ice cubes in the freezer, empty the container and discard the ice production of the next 24 hours.

– If the appliance or ice maker have not been routinely used for several weeks or months, or if the ice cubes have an unpleasant odor, change the water filter.

Water filter change indicator

The change indicator will appear approx. every 6 months depending on the quantity of ice produced.

filter

– When the filter indicator lights red, this is an indication that a filter change will soon be necessary.

New water filters (Bypass and Active charcoal filters) are available from Miele.

■ When the filter indicator flashes red in the display the filter must be changed.

Exchanging the water filter

Note: Air trapped in the system may cause water and the filter cartridge to eject forcefully. Use caution when removing.

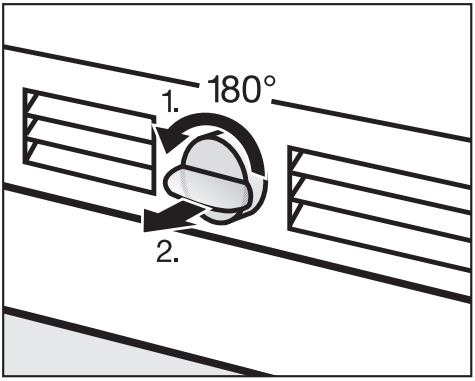

- Push in and rotate the filter cap on the base panel of your appliance counterclockwise 180°, **1**.
- Pull the used filter cartridge out of the appliance, **2**.

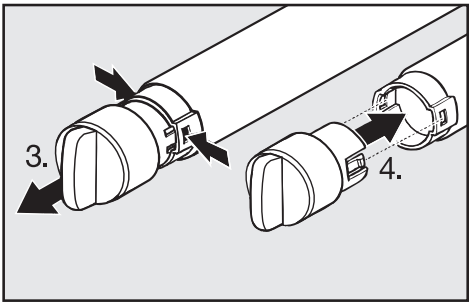

- Remove the cap from the used filter, **3**.
- Take a new filter cartridge out of the packaging and remove the protective cap.
- Push the cap onto the new filter cartridge, **4**.

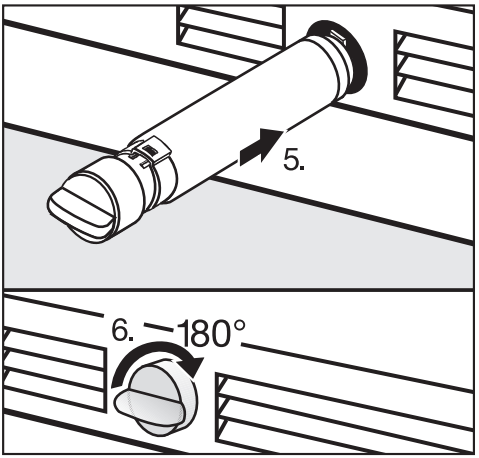

- Push the filter cartridge with cap, in a horizontal position, all the way into the opening in the base panel, **5.**
- Rotate the filter cartridge clockwise 180° until the cap is in a horizontal position, **6**.

filter

- After the filter change the filter indicator in the display still flashes. The change must be be confirmed in the electronic.

Confirming the filter change

filter

- Press and hold the filter change sensor button.

- At the same time place a finger on the access button. Press and hold both sensor buttons for approx. 5 seconds until a beep is heard.

The water filter change has been confirmed and the filter change indicator had been reset.

The filter change indicator goes out.

- Close the door.

After installing a new water filter discard the first 24 hours of ice production.

Using an external water filter

If your household water supply already has an external water filter installed, leave the standard water filter (bypass cartridge) installed in the appliance.

Performance Data Sheet
Model: Miele 07134220
Use Replacement Cartridge 07134220

The concentration of the indicated substances in water entering the system was reduced to a concentration less than or equal to the permissible limit for water leaving the system as specified in NSF/ANSI Standard 42 and Standard 53.

System tested and certified by NSF International against NSF/ANSI Standard 42 and Standard 53 for the reduction of the claims specified on the Performance Data Sheet.

Capacity 739.68 Gallons (2800 Liters)
Contaminant Reduction Determined by NSF testing.

Substance Reduction	Average Influent	NSF specified Challenge Concentration	Avg % Reduction	Average Product Water Concentration	Max Permissible Product Water Concentration	NSF Reduction Requirements	NSF Test Report
Chlorine Taste and Odor	2.1 mg/L	2.0 mg/L ± 10%	97.6%	0.05 mg/L	N/A	≥ 50%	J-00121313
Nominal Particulate Class I, ≥0.5 to < 1.0 µm	9,100,000 pts/mL	At least 10,000 particles/mL	98.8%	111,817 pts/ml	N/A	≥85%	J-00099871
Cyst*	170,000 cysts/L	Minimum 50,000 cysts/L	99.99%	0.001 cyst/L	N/A	≥99.95%	J-00109715

* Based on the use of Cryptosporidium parvum oocysts

FOR RESIDENTIAL USE ONLY

Application Guidelines/Water Supply Parameters

Service Flow	0.75 gpm (2.83 lpm)
Water Supply	Potable Water
Water Pressure	30 -120 psi (207 – 827 kPa)
Water Temperature	33ºF - 100ºF (0.6ºC - 38ºC)

It is essential that the manufacturer's recommended installation, maintenance and filter replacement requirements be carried out for the product to perform as advertised. See Installation Manual for Warranty information.

Note: While the testing was performed under standard laboratory conditions, actual performance may vary.

Replacement Cartridge: 07622430

For estimated costs of replacement elements please contact your local dealer, go to www.miele-shop.com or call Tel. 0180 31 31 340 (€ 0,09/Min.).

⚠ WARNING

Read entire manual. Failure to follow all guides and rules could cause personal injury or property damage.

- Check with your local public works department for plumbing codes. You must follow their guidelines as you install the water filtration system.
- Your water filtration system will withstand up to 120 pounds per square inch (psi) water pressure. If your water supply pressure is higher than 80 psi, install a pressure reducing valve before installing the water filtration system.

To reduce the risk associated with the ingestion of contaminants:

- DO NOT use with water that is microbiologically unsafe or of unknown quality without adequate disinfection before or after the system. Systems certified for cyst reduction may be used on disinfected water that may contain filterable cysts.

NOTICE

To reduce the risk associated with water leakage or flooding:

- Read and follow Use Instructions before installation and use of this system.
- Change the disposable filter cartridge every six months or sooner if you observe a noticeable reduction in water flow rate.
- Failure to replace the disposable filter cartridge at recommended intervals may lead to reduced filter performance and failure of the filter, causing property damage from water leakage or flooding.
- For questions or concerns, please contact Customer Service at Tel. 0180 31 31 340 (€0,09/Min.).

3M is a trademark of 3M Company used under license.
NSF is a trademark of NSF International.
© 2017 3M Company. All rights reserved.
34-8721-1445-8

Manufactured by:
3M Purification Inc.
3130 Lexington Avenue South,
Eagan, MN 55121

This product KF 1803 SF, KF 1813 SF (KIMBM30US) / KF 1903 SF, KF 1913 SF (KIMBM36US) is tested and certified by WQA against NSF/ANSI 372 for "lead free" compliance.

Miele & Cie. KG
Carl-Miele-Straße 29
D-33332 Gütersloh

Frequently asked questions

With the aid of the following guide minor problems can be corrected without a service call.

Repairs should only be carried out by a qualified and trained person in strict accordance with local and national safety regulations. Unauthorized repairs could cause personal injury or machine damage and may void the warranty.

Problems with temperature		
Issue	**Possible fault**	**Solution**
The refrigerator or freezer section does not get cold.	The machine is not turned on.	Check whether the appliance is switched on at the main switch. The temperature display must be lit up.
	The machine is not plugged in.	Check that the plug is correctly inserted in the power outlet.
	Check that the fuse has not tripped.	Reset the circuit breaker. If the breaker trips again the appliance or the outlet may be defective. Contact Miele or a qualified electrician.
	The temperature is set incorrectly.	Check the display.
The temperature in the refrigerator or freezer section is too low.	Select a warmer temperature.	See "Selecting the correct temperature".
	The SuperCool function is still on.	SuperCool automatically shuts off after: 6 hours for refrigerator; 52 hours for freezer.
	The door is not closed.	Check that the doors have been closed properly.
	A large amount of food is being frozen at the same time.	This makes the compressor run longer, causing the temperature in the freezer section to fall automatically.

Problems with temperature		
Issue	**Possible fault**	**Solution**
The freezer section is too warm.	The room temperature is lower than the ambient temperature for which the appliance is designed.	Raise the temperature of the room. Operating the appliance in a room that is too cold will cause the cooling system to switch off for too long, causing the freezer section to become too warm.
The temperature display for the freezer shows -18°C, although I have set a higher temperature.	This is not a fault. If the ice maker is turned on while the ambient temperature of the room is (<+18 ° C), a temperature of -18°C is automatically displayed. Only then will the ice maker function properly.	

General problems		
Issue	**Possible fault**	**Solution**
Water is flowing out of the appliance.	Close the shut-off valve immediately.	
	Check whether the water pipe in the appliance is defective.	Contact Miele Technical Service.
	Check whether the water pressure is too low.	Contact a plumber.
	Check whether the correct water valve has been installed.	Self-tapping valves and $^{3}/_{16}$" (4.76 mm) saddle valves reduce the water pressure and can block the pipe.
The door to the freezer section will not open.	This is not a fault. The suction caused by opening and closing the door too many times in succession prevents it from opening.	Wait a few minutes, then try again. It should now open without force.
The compressor kicks on very frequently and for too long.	The ventilation slits in the plinth and in the top of the appliance are covered or dusty.	Clean with a vacuum or brush.
	The doors have been opened too frequently, or a large amount of fresh food has been put in at once for freezing.	Once the fridge gets down to the set temperature the compressor will turn off.
	The door is not closed.	Check that the doors have been closed properly.
Nothing shows in the display.	Power is not reaching the appliance or there has been a power failure.	Check the power supply to the machine.

Alarm / Indicator warnings		
Issue	**Possible fault**	**Solution**
The alarm is ringing.	The appliance door(s) have been open for longer than 5 minutes.	Close the door(s).
The alarm is ringing and the "alarm" indicator for the door or temperature is flashing.	The door is not closed.	Once the alarm condition has been corrected, the alarm will turn off and the "alarm" indicator will stop flashing. The temperature indicator will indicate the highest temperature reached during the alarm.
	A large amount of food is being frozen at the same time.	
	There has been a power failure.	
The filter display is red.	This is a warning that the water filter needs to be changed soon.	Order replacement filters from Miele.
The filter display is flashing red.	The water filter needs to be changed.	See "Exchanging the water filter".

Problems with the ice maker		
Issue	**Possible fault**	**Solution**
The ice cube maker will not switch on.	The appliance is not plugged in.	Check that the appliance is connected to the power supply.
The ice cube maker is not producing any ice cubes.	When the appliance is turned on for the very first time, it can take up to 10 hours for the first ice cubes to drop out of the ice cube maker and collect in the container.	
	The appliance is not turned on.	Check that the appliance is switched on.
	The water supply line was not primed (purged of air) before the appliance was used for the first time.	Contact Miele.
	Check if: – the ice cube maker is switched on. – the water supply line is open. – there are ice cubes stuck together and blocking the exit. – the ice cube container is in the right position. – the freezer compartment temperature is too high. – the water pressure is too low. The water pressure must be between 25 and 80 psi (1.7-5.5 bar).	See "Ice Cube Maker" and/or "Plumbing" for more information.
	Check whether the correct water valve has been installed.	Self-tapping valves and $^{3}/_{16}$" (4.76 mm) saddle valves reduce the water pressure and can block the pipe.

Problems with the ice maker		
Issue	**Possible fault**	**Solution**
The ice cubes are small.	Other domestic appliances that use water are in operation.	Avoid using such items as a dishwasher, washing machine or shower at the same time.
	Check whether the water filter needs changing.	See "Water filter" for more information.
	Check the water pressure. The water pressure must be between 25 and 80 psi (1.7-5.5 bar).	Consult a plumber.
	Check whether the correct water valve has been installed.	Self-tapping valves and $^{3}/_{16}$" (4.76 mm) saddle valves reduce the water pressure and can block the pipe.
The ice cubes have an unpleasant odor/flavor.	When ice is stored for an extended period it may absorb odors, which affects the taste.	Use the ice maker more frequently.
	Check if the ice cube container is dirty.	Clean the container.
	Unsealed packages in the freezer will transfer odor/flavor particles to the ice cubes.	Check that food has been packed in airtight containers.

Problems with the ice maker		
Issue	**Possible fault**	**Solution**
The ice maker is not producing enough ice or the ice cubes are misshapen.	Check the water pressure. The water pressure must be between 25 and 80 psi (1.7-5.5 bar).	Contact a plumber.
	Check that the freezer temperature is not too low.	See "Selecting the correct temperature".
	Change the water filter.	See "Water filter".
Ice is forming in the supply hose to the ice maker.	Check the water pressure. The water pressure must be between 25 and 80 psi (1.7-5.5 bar).	Contact a plumber.
	Check whether the freezer compartment temperature is too high.	See "Selecting the correct temperature".

Normal noises	What causes them
Brrrrr...	This noise may get louder for brief periods when the motor kicks on.
Blub, blub....	A gurgling noise can be heard when the refrigerant circulates through the pipes.
Click....	Clicking sounds occur whenever the thermostat turns the motor on or off.
Sssrrrrr....	In multi-section and frost-free appliances, the movement of air circulating through the appliance can sometimes just barely be heard.
	In appliances with a water tank, a humming noise can be heard when the water pump is running.
Crack...	A cracking noise can be heard when the appliance materials expand.

Keep in mind that a certain amount of noise is unavoidable (from the compressor and the refrigerant circulating through the system).

Noises that you can easily eliminate	Possible cause	Solution
Rattling, clinking	The appliance is not level.	Realign the appliance using a level, by raising or lowering the screw feet underneath the appliance.
	The appliance is touching another appliance or piece of furniture.	Move it away.
	Drawers, baskets or shelves are jiggling or are stuck.	Check all removable items and refit them correctly.
	Bottles or containers are touching.	Separate them.
	The transport cord clips are still hanging on the back of the appliance.	Remove the cord clips.

In the event of a fault which you cannot correct yourself, please contact

– your Miele dealer

or

– Miele Technical Service.

See back cover of the this manual contact details.

When contacting Miele Technical Service, please quote the model and serial number of your appliance. This information is given on the data plate inside your appliance.

Warranty

For additional information, please refer to your warranty booklet.

See the end of these operating and installation instructions for this telephone number.

MieleCare

(USA only)

MieleCare, our Extended Service Contract program; gives you the assurance of knowing that your appliance investment is covered by 5 years of worry-free ownership. **MieleCare** is the only Extended Service Contract in the industry that guarantees repairs by a Miele Authorized Service Provider using genuine Miele parts. Only genuine Miele parts installed by factory-trained professionals can guarantee the safety, reliability and longevity of your Miele appliance.

Please note that unless expressly approved in writing by the Miele Service department, Extended Service Contracts offered by other providers for Miele products will not be recognized by Miele. Our goal is to prevent unauthorized (and untrained) service personnel from working on your Miele products, possibly doing further damage to them, you and/or your home.

To learn more about **MieleCare** Extended Service Contracts, please contact your appliance dealer or visit us online at:

http://www.mieleusa.com/Service/ExtendedContracts

Miele

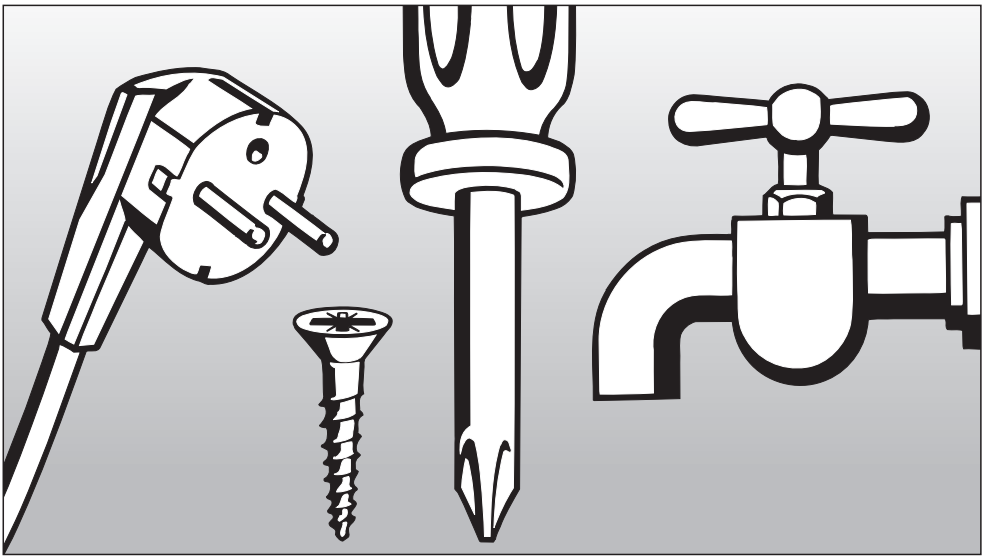

Installation Instructions

Information is subject to change. Please refer to our website to obtain the most current product specification, technical & warranty information.

To prevent accidents
and machine damage
read these instructions
before
installation or use.

Disposing of the packaging materials

The packaging is designed to protect the appliance from damage during transportation. The packaging materials used are selected from materials which are environmentally friendly for disposal and should be recycled.

Ensure that any plastic wrappings, bags, etc. are disposed of safely and kept out of the reach of children. Return the packaging to your dealer.

Disposal of your old appliance

Old appliances may contain materials that can be recycled. Please contact your local recycling authority about the possibility of recycling these materials.

Please take care not to damage the pipework while the appliance is being stored for transport to a waste disposal facility.
By protecting the pipework, you help keep the coolants and compressor oil from contaminating the environment.

Before discarding an old appliance disconnect it from the electrical supply and cut off the power cord to prevent it from becoming a hazard.

Have the appliance installed by a qualified technician, according to the enclosed installation instructions.

⚠ WARNING
This appliance is top-heavy and must be secured to prevent it from tipping forward.
Keep the doors closed until the appliance is completely installed and secured as per the installation instructions.

Empty weight of your machine:

KF 18X3 SF . . . . . 511 lbs (232 kg)
KF 19X3 SF . . . . . 562 lbs (255 kg)

Climate Range

The appliance is designed for use within certain climate ranges (ambient temperatures) and should not be used outside this range. The climate range of this appliance is stated on the data plate inside the appliance.

Climate range	Ambient room temperature
SN	+50°F (10 °C) to +90°F (32 °C)
N	+60°F (16 °C) to +90°F (32 °C)
ST	+60°F (16 °C) to +100°F (38 °C)
T	+60°F (16 °C) to 110°F (43 °C)

Operating in a room which is too cold will cause the compressor to switch off for too long, causing the internal temperature in the appliance to rise with the risk of food deteriorating and going off.

Installation site

The appliance should be installed in a dry, well-ventilated room.

Do not install the appliance:
- outdoors
- in an environment with dripping water
- in rooms that are at risk of frost.

The installation location should not be exposed to direct sunlight, nor near a heat source, such as an oven, radiator, etc.

The ambient temperature should not drop below 55°F (13°C) or rise above 110°F (43°C), otherwise malfunctions may occur.

If installation next to a heat source is unavoidable observe the following minimum distances from the heat source:

– 1 $^{1}/_{4}$" (3 cm) from an electric cooktop or electric oven.

– 12" (30 cm) from a gas or oil cooktop, range or oven.

The following should also be taken into consideration:

– The electrical outlet must be easily accessible in case of an emergency,not concealed behind the appliance.

– The plug and cord must not touch the rear of the appliance as they could be damaged by vibrations from the appliance.

– Do not plug in other devices behind this appliance.

Important! When there is high humidity a build-up of condensation on the outer surfaces of the appliance can occur.This can cause the surfaces to corrode.To prevent this, it is advisable to install the appliance in a dry and/or an air-conditioned room with sufficient ventilation.Please ensure that doors close and seal properly after installation and that the appliance is installed in accordance with these installation instructions and and with the required ventilation openings.

– If the room is too cold, it will cause the cooling system in the appliance to remain off for too long.This can cause the temperature in the appliance to rise, resulting in damage.

Base

A fully loaded appliance is very heavy. The load-bearing capacity of your floor must meet the following requirements:

KF 18X3 SF . . . . . 1,007 lbs (457 kg)
KF 19X3 SF . . . . . 1,250 lbs (567 kg)

To ensure that the appliance is installed securely and functions properly, the base must be flat, level and made of a hard, rigid material.

If in doubt, contact Miele.

Furniture/fixtures

The new appliance will be mounted securely to adjacent and overhead furniture/fixtures.
For this reason, it is essential that all attachable furniture/fixtures be connected securely to the floor or wall by a suitable means.

Ventilation

The air intake and outlet must not be blocked or covered in any way. They also need to be dusted/cleaned on a regular basis.

Installation niche

To ensure safe, trouble-free installation and the best possible cosmetic result, check to be sure that the installation space complies with the installation dimensions. See "Niche dimensions".

The side walls of the installation cavity must be plumb.

The minimum thickness of the side walls and the top wall must be 5/8" (16 mm).

The minimum thickness of the toe-kick panel must be ½" (13 mm). A thickness of $^{3}/_{4}$" (19 mm) is recommended.

Stainless steel panels

Stainless steel door panels and toe-kick covers are available from Miele.

Installation options

There are many different installation options. You are limited only by the design of the kitchen.

The door hinge cannot be exchanged.

Single column

The appliance can be installed at any preferred location in the kitchen.

However, be sure the door will open and close properly in the chosen location.

Side-by-side

This appliance can be installed "side-by-side" with another fridge/freezer using a "Merging Kit".

The "Merging Kit" is available from Miele.

Contact Miele or your dealer for specific information about which combinations will work with your appliance.

For instructions on how to attach the appliances and install the heating mat, please refer to the instructions included with the "Merging Kit", available from Miele.

Appliances attached together using the "Merging Kit"

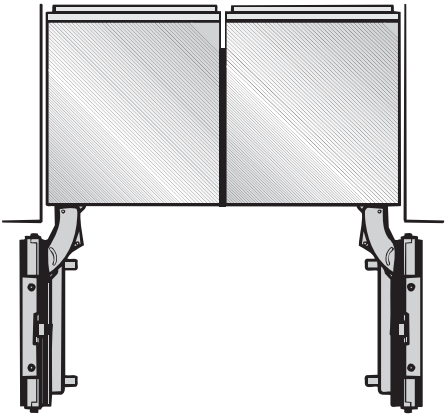

If the appliances are installed directly next to each other (without a partition), they need to be attached together using the "Merging Kit".

Installation with partition using the "Merging Kit"

The minimum thickness of the partition is $^{5}/_{8}$" (16 mm).

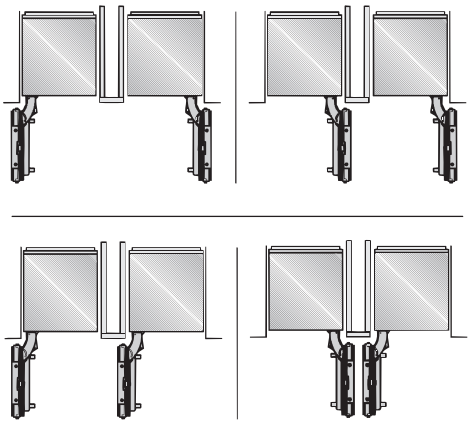

If there is a partition with a thickness **from $^{5}/_{8}$" (16 mm) to 6 $^{5}/_{16}$" (160 mm)** between the adjacent appliances, then each appliance should be individually installed within its own niche using the mounting accessories included.
The "Merging Kit" will also be needed.

The "Merging Kit" is available from Miele.

Installation with partition without using the "Merging Kit"

If there is a partition with a thickness of **more than 6 $^{5}/_{16}$" (160 mm)** between the adjacent appliances, then each appliance should be individually installed within its own niche using the mounting accessories included (the "Merging Kit" is not necessary).

Side panels

If one side of the appliance is visible, a side panel must be used.

The side panel must be firmly secured to the wall, the floor and the overhead furniture/fixtures before the appliance is placed in the cavity.

The dimensions of the side panel are taken from the opposite wall of the installation space. During installation, ensure that the cavity is square and the measurements are correct.

Adjusting the door opening angle (optional accessory)

Depending on the installation site, it may be necessary to adjust the door opening angle to 90°.

- Open the door.

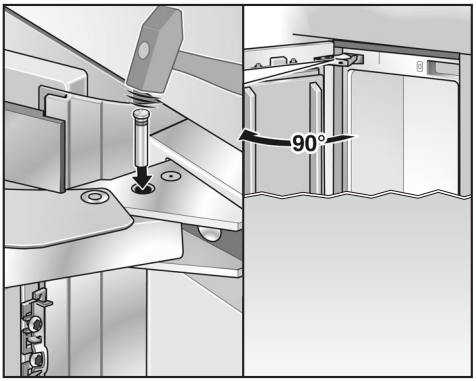

- Insert the banking pin through the holes and drive in with a hammer.

The door opening angle is now limited to 90°.

Door dimensions (opening angle 90°)

KF 1803 SF, KF 1813 SF

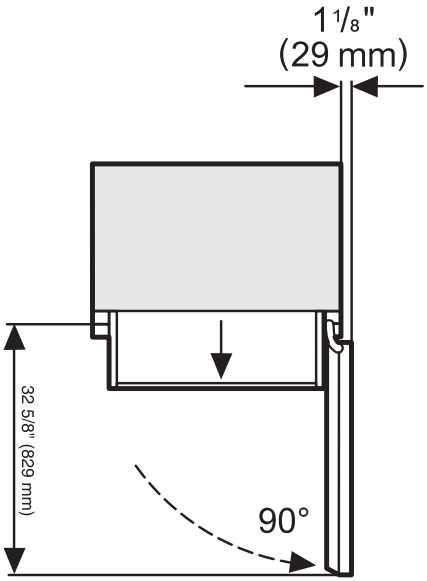

KF 1903 SF, KF 1913 SF

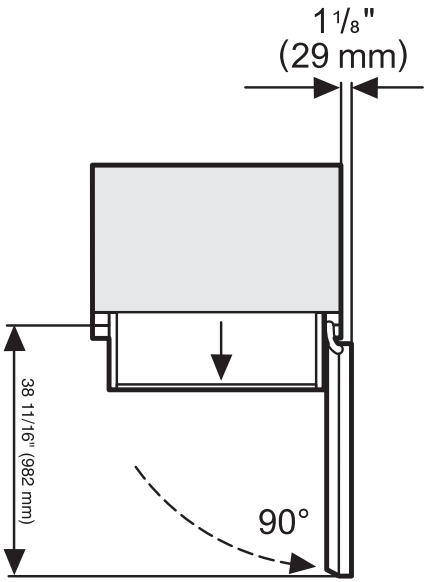

Door dimensions (opening angle 115°)

KF 1803 SF, KF 1813 SF

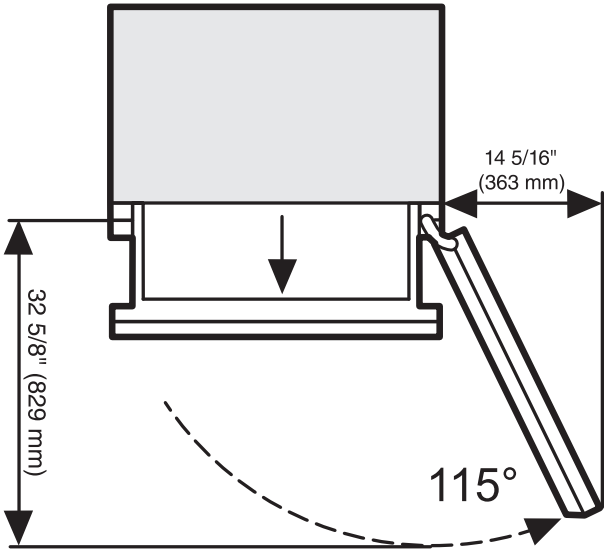

KF 1903 SF, KF 1913 SF

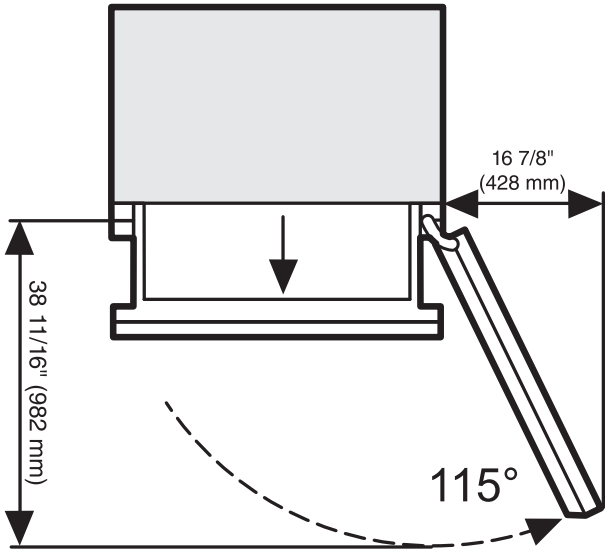

Niche dimensions

KF 1803 SF, KF 1813 SF

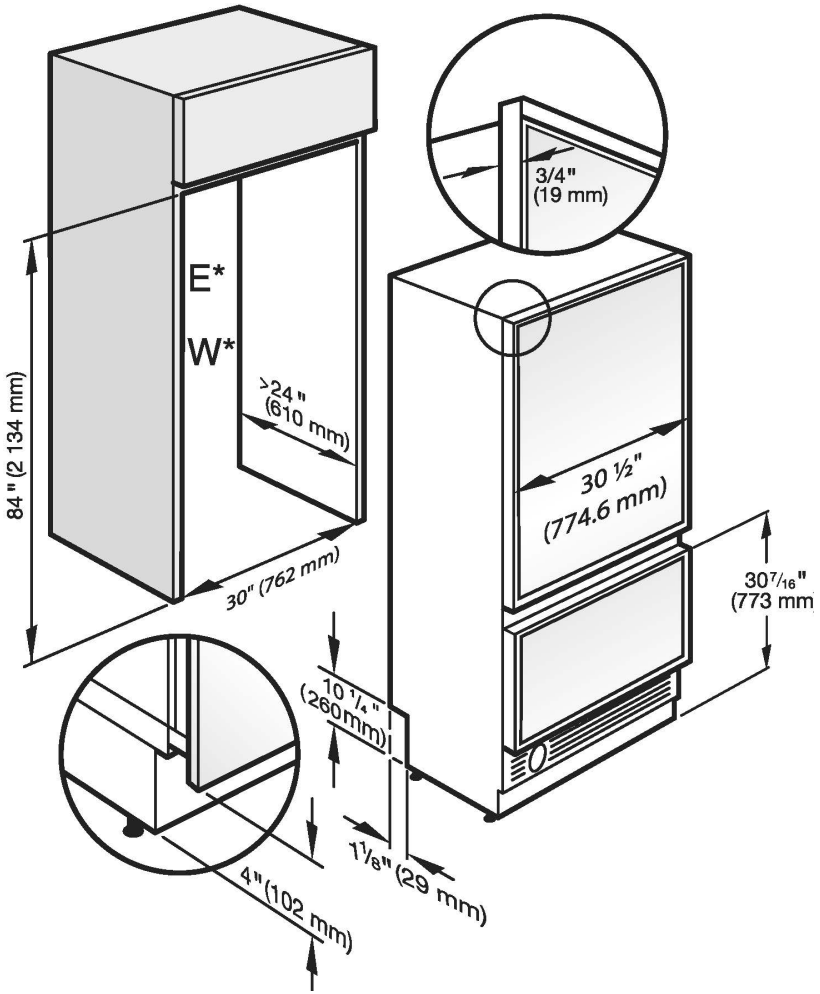

E*: The position of the electrical connection should not be higher than 9" from the floor.
W*: The position of the 1/4" water supply (not included) should not be higher than 2" from the floor.

Please notice:
Miele recommends to place the electrical outlet next to the appliance. The electrical outlet must be easily accessible in case of an emergency!

KF 1903 SF, KF 1913 SF

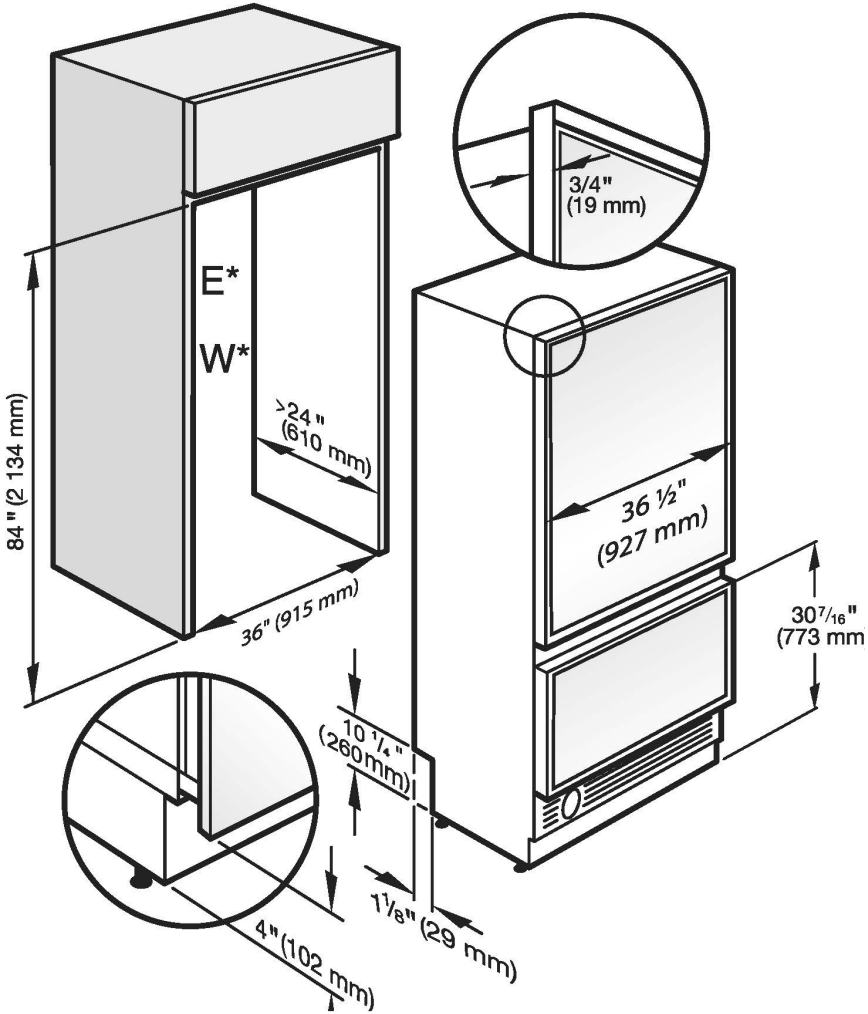

E*: The position of the electrical connection should not be higher than 9" from the floor.
W*: The position of the 1/4" water supply (not included) should not be higher than 2" from the floor.

Please notice:
Miele recommends to place the electrical outlet next to the appliance. The electrical outlet must be easily accessible in case of an emergency!

Before you begin

Read these instructions completely and carefully.
Have the appliance installed by a qualified technician, according to the enclosed installation instructions.

To reduce the risk of injury or damage to the product, two people should be used for installation.

These installation instructions are intended for use by qualified installers. In addition to these instructions, the appliance must be installed in accordance with all local codes. In the absence of a local code, the following should be used:

- In the USA, the National Electric Code, ANSI/NFPA 70 - latest edition/State and Municipal codes and/or local codes.
- In Canada, the Canadian Electric code C22.1 - latest edition/Provincial and Municipal codes and/or local codes.

Tools needed for installation

- Cordless screwdriver
- Torx screwdriver (TX 20)
- Hammer drill
- Wood drills in different sizes
- Hammer
- Rachet ($^5/_{16}$" / 8 mm)
- Adhesive tape
- Multi-grip pliers
- Level
- Tape measure
- Square

When fastening the cabinet to the wall behind it (see "Installing the appliance") use:

- suitable plugs/screws depending on the type of wall.
- several mounting brackets, if required.

Other

- Stepladder
- Dolly, hand truck
- Wooden beam (cross section min. 3" x 4" [75 mm x 100 mm] as an alternative tilt protection, length depends on the width of the installation cavity)
- Wood screws in different sizes

Optional accessories

- "Merging Kit" for side-by-side installation

Aligning the housing unit

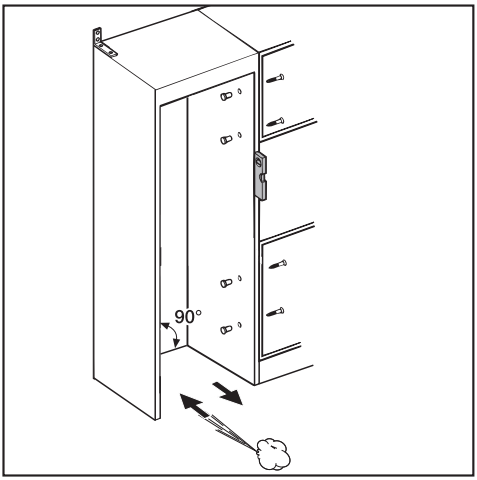

The housing unit must be carefully aligned using a spirit level before installing the appliance. The unit corners must be at right angles, as otherwise the furniture door will not align correctly with the 4 corners of the appliance.

– The side panels of the housing must be even.

– The housing unit panels must be at least 16 mm thick.

– The plinth facing must be at least 13 mm thick (or preferably 19 mm).

Check the installation niche

To ensure a safe, trouble-free installation and the best possible cosmetic result, check to be sure that the installation space complies with the installation requirements.

- Check the base (see "Installation").
- Check the dimensions of the cavity.
- Check that the cavity is square.
- Check the location of the power outlet.
- Check the location of the water connection (see "Plumbing").
- Check that all furniture parts in the vicinity of the appliance are securely connected to the wall.
- Check that the adjacent furniture/fixtures do not collide with the open door.

Before installation

⚠ Caution - the appliance is very heavy. Use caution when unpacking and opening the door, danger of tipping.

- To protect the base from damage during installation, attach a hard board, linoleum, etc., to the floor in front of the intended installation location.
- Take the supplied accessories out of the protective packaging.

There are transportation safety devices inside the appliance to protect the shelves and storage compartments until installation is complete. **Do not remove them**, or parts may be damaged.

- Check the appliance for damage in transit.

Do not install the appliance if it is visibly damaged. If in doubt, contact your dealer.

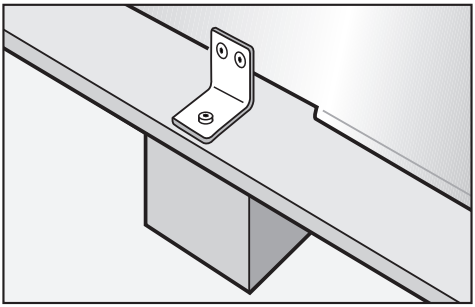

- Loosen the bracket that holds the appliance to the pallet.

⚠ Caution! The appliance is no longer secured and may be unstable.

- From the rear of the appliance carefully lift it from the pallet.

Once the appliance is on the ground it can be wheeled around.

Preparing the installation niche

⚠ Keep the appliance door closed until it is securely fastened in the niche. Tipping hazard.

Because of the size and weight of the appliance, it is essential to ensure that the appliance cannot tip over once it has been mounted in the niche.

Mounting Accessories

The mounting accessories needed for installing the appliance into the niche are included in the packaging. Several plastic bags are included which are numbered alphabetically.

The bag needed for each step will be marked with its respective letter.

Anti-tip brackets

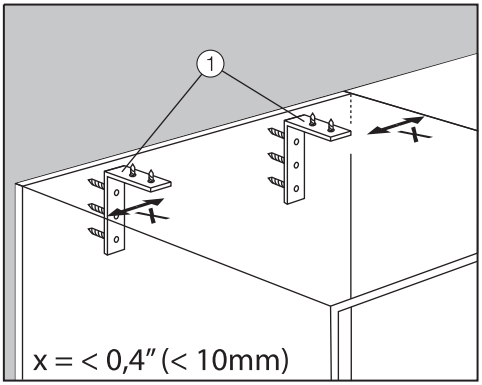

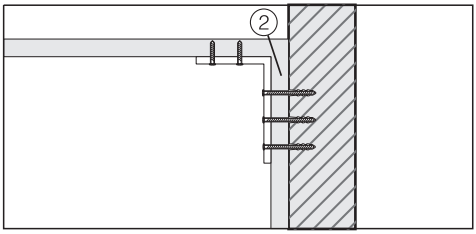

The anti-tip brackets ① keep the appliance safely secured in the installation niche ② and prevent it from tipping.

⚠ Risk of tipping
The installation niche must be securely attached to the wall behind it. This is the only way the appliance, which is later secured in the niche, can be prevented from tipping!

Two anti-tip brackets are recommended for each appliance. For side-by-side installations 4 brackets are recommended.

- Position the anti-tip brackets on the left and right in the installation niche so that there is no more than 3/8" (10 mm) of space between the brackets and the side walls.
- Mark the drill holes in the anti-tip brackets on the back wall and on the ceiling of the installation niche.
- Set the brackets aside - they will be needed again later.

Screws are supplied with the appliance for various applications/materials.

If the anti-tip brackets cannot be attached securely with the screws supplied, an alternative anti-tip device can be used.

Assure that there are no electrical wires or plumbing in the area which the screws could penetrate-risk of injury and damage.

- Now attach the installation niche to the wall.

The built-in cabinet must be secured to the wall behind it with several screws.

In a cabinet with a back wall

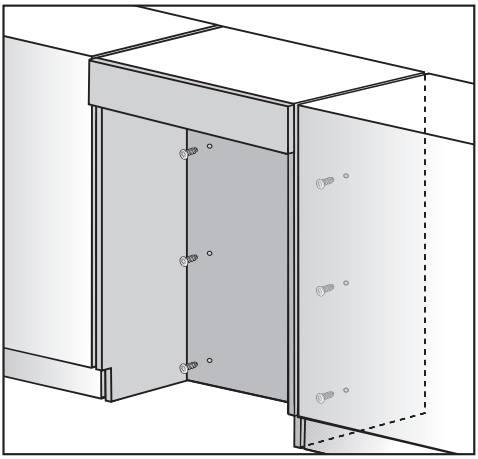

- screw the back wall of the cabinet in several places directly to the wall behind it.
  For this, use suitable plugs/screws depending on the type of wall.

In a cabinet without a back wall

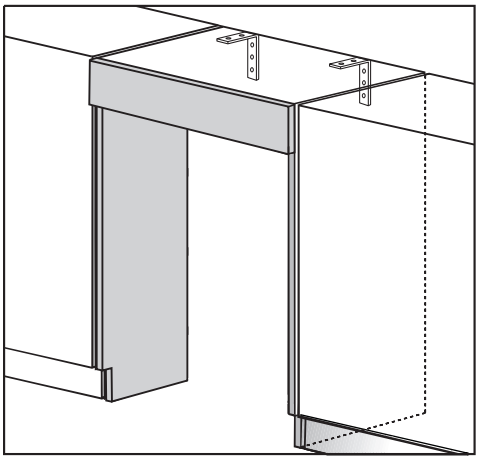

- screw the cabinet to the wall behind it in several places using suitable mounting brackets.
  For this, use suitable plugs/screws depending on the type of wall.

Securing an alternative anti-tip device

If the anti-tip brackets cannot be attached securely, an alternative anti-tip device can be used.
Ensure that there is no "give" between the appliance and the anti-tip device.

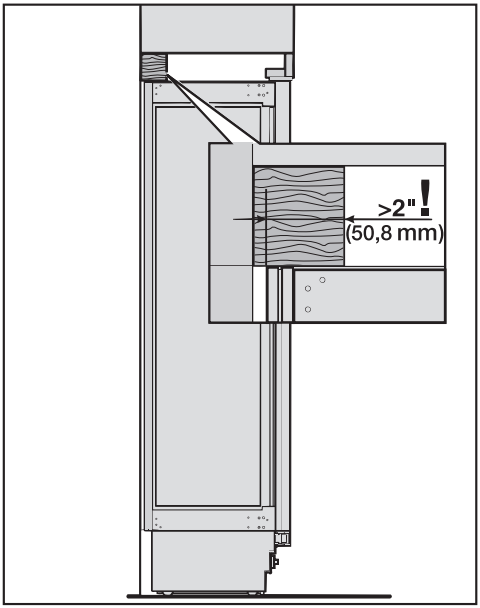

If possible, always screw the wooden beam to existing studs.

- Cut a wooden beam (cross section min. 3" x 4" [75 mm x 100 mm]) to the required length.
  - The length is equal to the width of the installation niche.
  - If the installation niche is deeper than the appliance, select a beam with a larger cross section, or attach two beams.
  - The beam must cover the appliance by at least 2" (50.8 mm).
- Mark the installation height (lower edge of the beam) on the rear wall of the niche.
- Select screws according to the thickness of the wooden beam. Example: 3 ½" (89 mm) screw for 2x4 beam.

Determine the number of screws based on the cavity width, to ensure that the beam will be attached securely.

- Locate wall studs near the rear wall of the cavity and mark drill holes in the beam.
- Pre-drill the wooden beam.
- Attach the wooden beam to the rear wall of the niche.

Now prepare the water connection from the appliance to the main supply line (see "Plumbing").

Sliding the appliance into the installation niche

If a side-by-side installation is desired, connect the two appliances together. See the Installation Manual included with the "Merging Kit".

■ Open the bottom door.

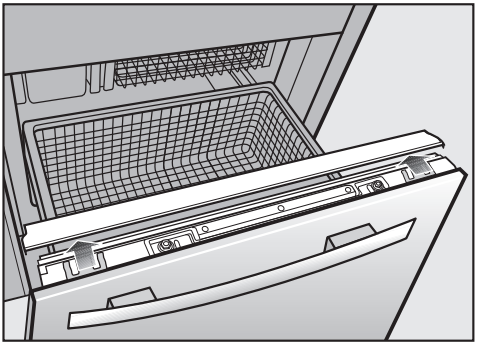

■ To remove the stainless steel front, loosen the two nuts and remove the cover strip.

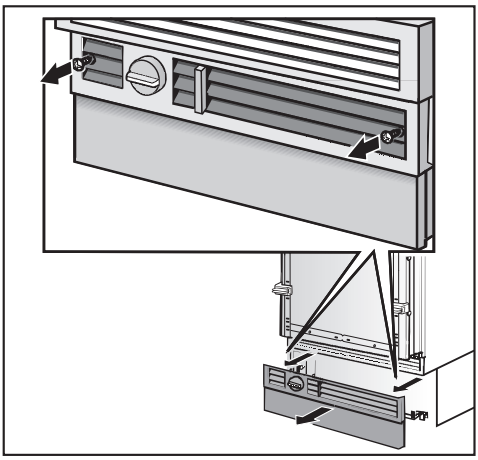

■ Unscrew the plinth.

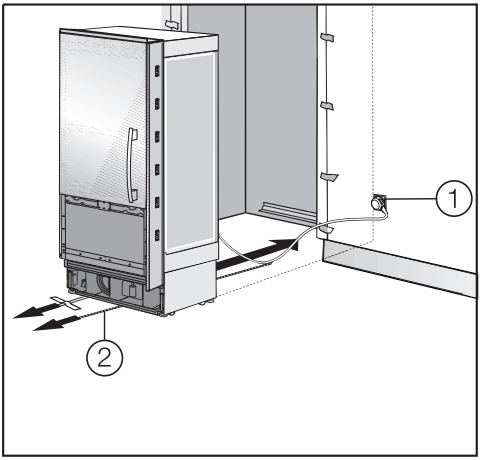

■ To protect the corners of the installation space, attach edge protectors where needed (not included).

■ Plug the appliance into the power outlet ①.

The plug of the appliance should be easily accessible after installation. If the plug is not accessible after the appliance has been installed, disconnection from the power supply should be completed via the circuit breaker.

In the case of side-by-side installations, a separate outlet must be used for each appliance.

- To prevent the power cord from becoming caught:
  Tie a piece of string to the middle of the power cord and feed it forward under the appliance. When sliding the appliance in, pull the cable forward ②.
- Carefully slide the appliance into the space.

If resistance is felt when attempting to slide the appliance into the installation niche - for example, because the floor is uneven,

- Turn the rear adjustable wheels slightly outward (see "Aligning the appliance"), then push the appliance in.

Be careful not to damage the water pipe or power cord attached to the floor.

- Remove the edge protectors.

Aligning the appliance

- Align the appliance with the custom front.

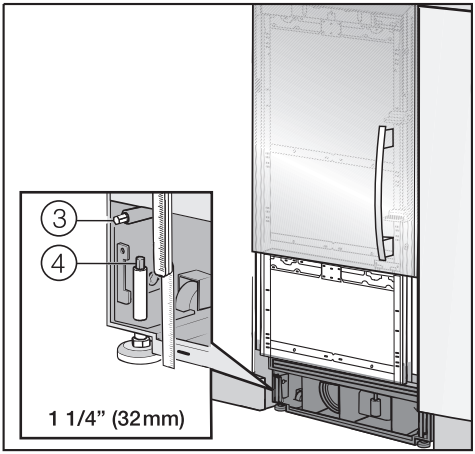

The height-adjustable feet at the front and rear can all be adjusted from the front:

– Front feet:
  Adjust with a rachet 5/16" (8 mm) ③.

– Rear feet:
  Adjust with a (cordless) screwdriver and/or a rachet 5/16" (8 mm) for fine adjustment ④.

Important!
When unscrewing the height-adjustable feet, proceed gradually, alternating between left and right.

- Unscrew the height-adjustable feet until the mark on the base has reached the indicated guide dimension 1 1/4" (32 mm). The guide dimension of 1 1/4" (32 mm) is related to a niche height of 84" (2134 mm).

Important!
The height-adjustable feet can only be unscrewed as far as the mark 2 3/16" (62 mm) on the base (max. niche height of 85 3/16" (2164 mm).

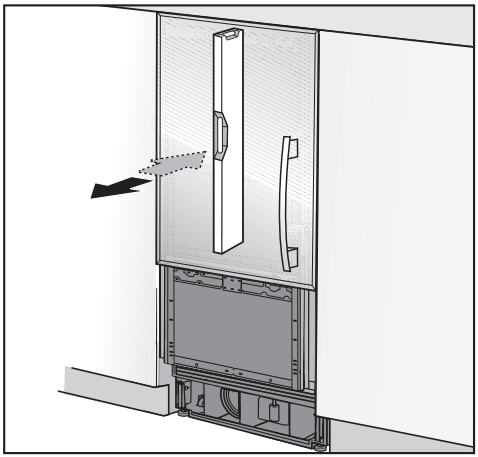

- Align the custom doors with a level.
- If using a wooden beam as an alternative anti-tip device, rotate the appliance all the way toward the wooden beam.

Note:

– The adjustment of the rear feet is aided if the appliance is lifted at the rear (tipped forward slightly).

Attaching the appliance to the installation niche

- Open the appliance doors.

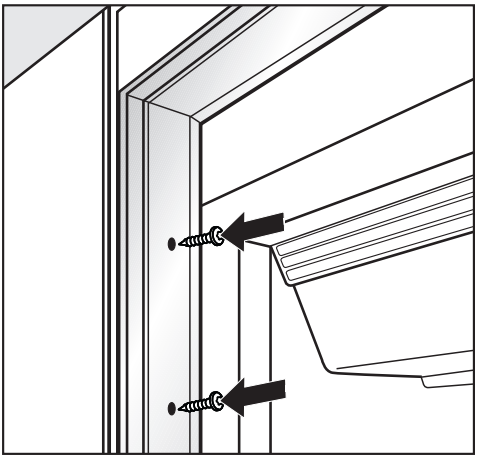

- Fasten the appliance on the left and right hand sides with the 3 (supplied) wood screws.

If there is a fairly large gap above the appliance, cut a wooden beam to fit exactly and place it in the gap.

Now connect the water supply to the appliance (see "Plumbing").

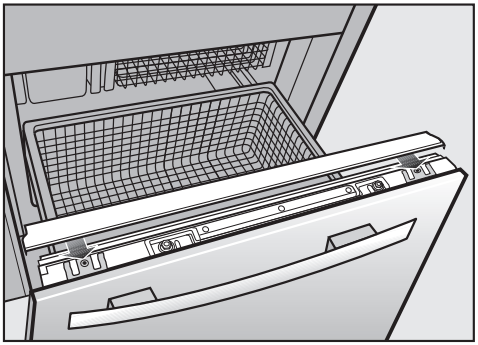

- Open the lower appliance door and hand the stainless steel cover on the double-threaded bolts.
- Screw the nuts onto the double-threaded bolts.
- Replace the cover strip.

Attaching the toe-kick cover

The maximum height of the toe-kick cover is 4" (101 mm) from the top of the floor. Do not cover the ventilation slits in the plinth. Risk of damage to the appliance.

- If required, cut the toe-kick cover to the required length and height.

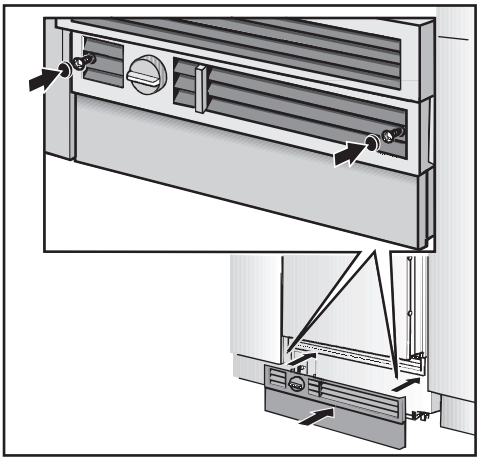

- Attach the plinth to the appliance, and put the included cover plates in place.

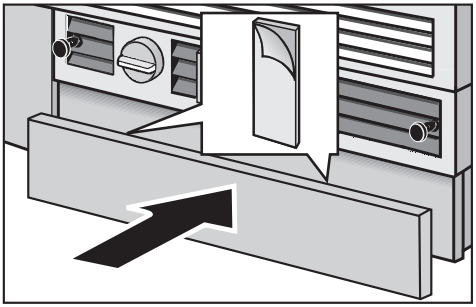

- Remove the foil from the adhesive strips.
- Attach the toe-kick cover to the plinth.

Mounting the air separator

The air separator keeps the supply and exhaust air separate. This prevents warm exhaust air from flowing into the machine, optimizing the energy performance of the unit.

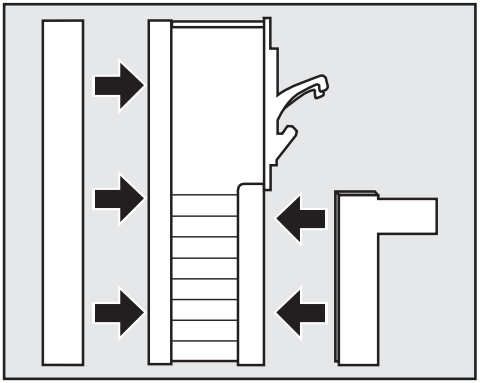

- If necessary, shorten the three parts of the air separator.
- Insert the foam pieces back into the sides.

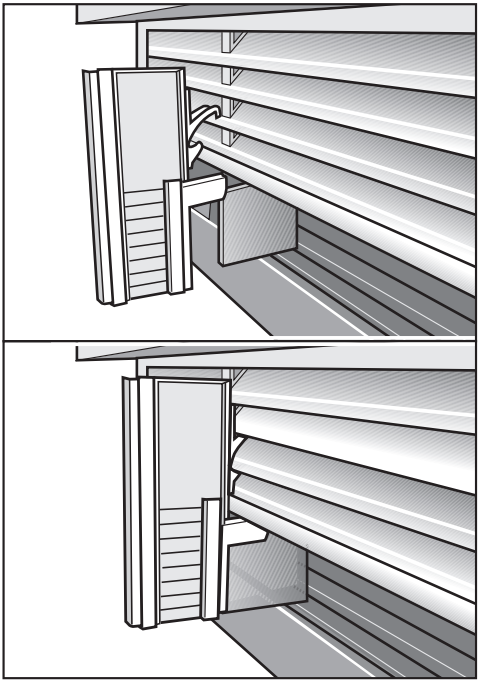

- Clip the air separator, left and right of the partition, in the exhaust grille. Be sure that it clicks into place and guides the foam partition under the exhaust grille.

Plumbing

All plumbing work should be carried out by a suitably qualified and competent person, in accordance with all applicable local and national regulations.

Disconnect the appliance from the electrical power supply before connecting it to the water supply.

Turn off the water supply before connecting the water lines to the ice cube maker.

The water quality must conform to country requirements for drinking water.

- The appliance is only suitable for connection to the cold water supply.
- The water pressure must be between 25 and 80 psi (1.7-5.5 bar).
- A separate shut-off valve must be installed, so that the water supply can be interrupted as needed.
- The maximum outer diameter of the water pipe (without fittings): $^{3}/_{8}$" (10 mm).

Install a pressure limiting device and water hammer arrester for inlet water pressures exceeding 80 psi.(Refer to Uniform Plumbing Code, Sections 608.2 and 609.10) Never install or operate where inlet water pressure may exceed 120 psi.

The shut-off valve for the water connection must not be located behind the appliance. It is recommended to place the shut-off valve directly next to the appliance (base unit) or in another easily accessible location.

Do not use pipe extenders.

In the event that the piping has to be replaced only Original Miele Spare parts are suitable for use. Contact Miele.

Preparing the water connection

The connection to the household water supply must be installed before the appliance is installed.

- Turn off the main water valve to prevent damage caused by leaking water.
- Attach the connecting pipe to the shut-off valve, according to the instructions supplied by the manufacturer of the ice cube maker installation kit.
- Install the connecting pipe. Always observe the indicated clearance dimensions to prevent damage to the connecting pipe when pushing in the appliance.

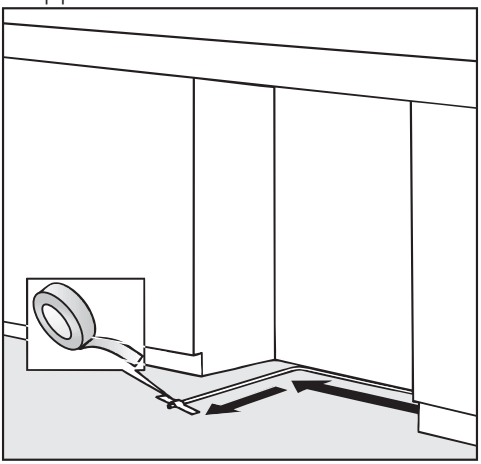

- Secure the connecting pipe to the floor with adhesive tape.
- You may now proceed to install the appliance. See "Installing the appliance".

For appliances with a hose guide

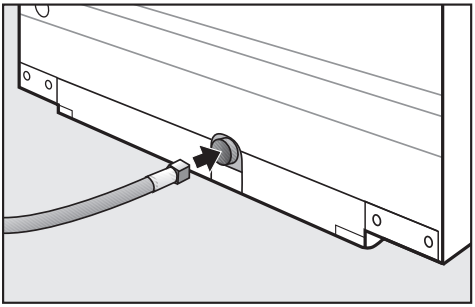

- position the device in front of the niche and push the stainless steel tube through the hose guide at the back of the unit.

At this point the niche should be ready for the appliance to be pushed back into it (see "Installing the appliance").

- You can now continue with the installation.

Connecting the water supply

When connecting the water pipe to the solenoid valve of the appliance, follow the instructions supplied by the manufacturer of the ice cube maker installation kit.

When bending the water pipe, be sure not to kink it, otherwise there is a risk of leaks and water damage.
Use bending aids.

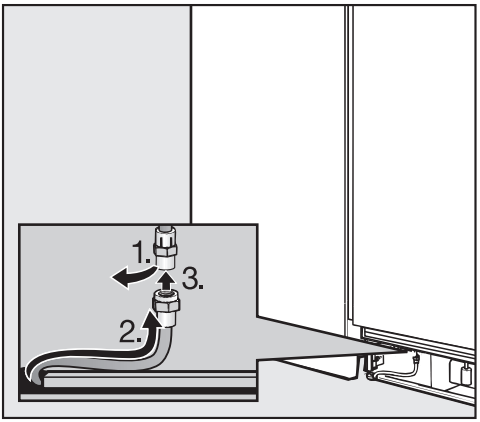

- Remove the cap from the appliance connection, **1**.
- Bend the water pipe to suit the location of the connection on the appliance, **2**.
- Push the union nut and seal onto the water pipe.
- Push the end of the water pipe into the appliance connection and screw on the union nut, **3**. First tighten by hand.
- Then use an open-ended wrench to tighten the union nut. Do not over tighten.
- Open the shut-off valve and the main water connection. Check for leaks at the connection for the shut-off valve and to the appliance.
- Turn the appliance on.

After a maximum of 10 hours the first ice cubes will drop out of the ice cube maker and collect in the ice cube container.

⚠ Avoid the risk of electrical shock
- Plug into a grounded 3-prong outlet.
- Do not move the ground plug.
- Do not use an adapter.
- Do not use an extension cord.

Failure to follow these instructions can result in death, fire, or electrical shock.

Improper connection of the equipment grounding conductor may result in electric shock. If you are in any doubt as to whether the appliance has been properly grounded, have the appliance checked by a qualified electrician or service technician.

Installation, repairs and other work by unqualified persons could be dangerous.

Before installing the appliance, verify that the voltage, load and circuit rating information found on the data plate match the household electrical supply.

If there are any questions regarding the electrical connection of this appliance to the power supply, please consult a licensed electrician or call the Miele Technical Service.

USA 1-800-999-1360

CDN 1-800-565-6435

The appliance is supplied with a UL-listed, 3-wire power cord and NEMA 5-15 P plug ready for connection to a 120 V, 60 Hz supply.
The fuse rating is 15 amps.

The appliance requires a 3-wire receptacle.
The receptacle must be installed by a licensed electrician only.

In the case of side-by-side installations, a separate outlet must be used for each appliance. Ideally, the power outlet should be next to the appliance and easily accessible. Do not connect the appliance to the power supply by an extension cord. Extension cords do not guarantee the required safety of the appliance (danger of overheating).

If any changes are needed to the household wiring or power supply, this work must be performed by a qualified electrician.

Please have the model and serial number of your appliance available before contacting Technical Service.

U.S.A.

Miele, Inc.

National Headquarters
9 Independence Way
Princeton, NJ 08540
Phone: 800-843-7231
Fax: 609-419-4298
www.mieleusa.com

Technical Service & Support Nationwide
Phone: 800-999-1360
Fax: 888-586-8056
TechnicalService@mieleusa.com

Canada

Importer
Miele Limited

Headquarters and Miele Centre
161 Four Valley Drive
Vaughan, ON L4K 4V8
www.miele.ca

Customer Care Centre
Phone: 800-565-6435
905-532-2272
customercare@miele.ca

Germany
Manufacturer
Miele & Cie. KG
Carl-Miele-Straße 29
33332 Gütersloh

Miele

KF 1803 SF
KF 1813 SF
KF 1903 SF
KF 1913 SF

CE

en - US, CA

M.-Nr. 10 605 980 / 05