Radcliffe EE | 85662CDFTBO

Job Name:_____ Job Type:_____ Quantity:_____ Comments:_____

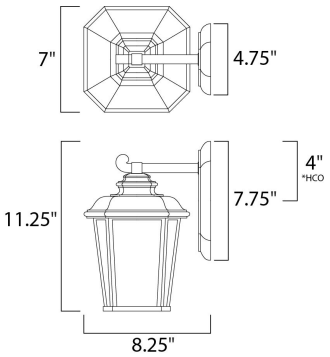

*height from center of outlet to the top of the fixture

Measurements:

Height	Width	Extension
11.25''	7.00''	8.25''
BP Height	BP Width	HCO
7.75''	4.75''	4.00''
Hanging Weight		
4.10 lb		

Lamping:

Fluorescent GU24	900 Rated Lumens
1.00 13W GU24	2700 Color Temperature
13 total watt	
Dimmable : No	

Shipping:

Carton Weight	Carton Width	Carton Height	Carton Length
5.80 lb	12.72''	11.00''	18.50''
Master Pack Qty	UPC	UPS	
1.0000	783209118515	Yes	

Finish:

Black Oxide BO

Glass:

Seedy/Frosted CDFT

Material:

Die Cast Aluminum

Certification:

Wet Location
CA Title 24

Additional:

GU24 (Included)

MAXIM LIGHTING
253 NORTH VINELAND AVE. | CITY OF INDUSTRY, CA 91746
T. 626.956.4200 | F. 626.956.4225
maximlighting.com
#Maximlighting

Always consult a qualified, licensed electrician before installation of any products....