Radcliffe | 3343WFBO

Job Name:_____ Job Type:_____ Quantity:_____ Comments:_____

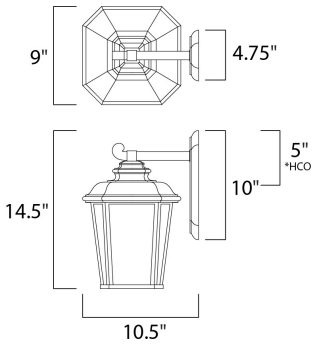

*height from center of outlet to the top of the fixture

Measurements:

Height	Width	Extension
14.50''	9.00''	10.50''
BP Height	BP Width	HCO
10.00''	4.75''	5.00''
Hanging Weight		
5.51 lb		

Lamping:

Incandescent MB

1.00 60W MB

60 total watt

Dimmable : Standard Dimmer

0 Rated Lumens

Color Temperature

Shipping:

Carton Weight	Carton Width	Carton Height	Carton Length
7.05 lb	14.57''	13.00''	19.69''
Master Pack Qty	UPC	UPS	
1.0000	783209112704	Yes	

Finish:

Black Oxide BO

Glass:

Weathered Frost WF

Material:

DIE CAST ALUMINUM

Certification:

Wet Location

Additional:

MB (Not Included)

253 NORTH VINELAND AVE. | CITY OF INDUSTRY, CA 91746
T. 626.956.4200 | F. 626.956.4225
maximlighting.com
#Maximlighting

Always consult a qualified, licensed electrician before installation of any products....