en-us_main.book.book Page 9 Wednesday, December 17, 2025 2:41 PM

INSTALLATION

Before Installing

Installation Overview

Please read the following installation instructions first after purchasing this washer or transporting it to another location.

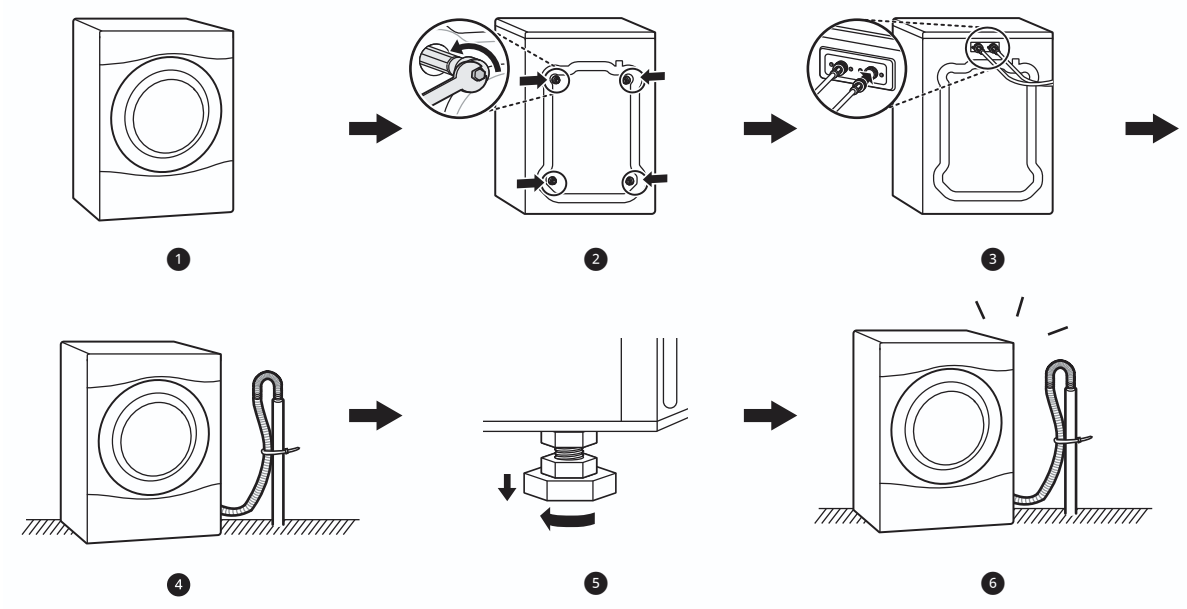

❶ Choosing the Proper Location

❷ Unpacking and Removing Shipping Material

❸ Connecting the Inlet Hoses

❹ Connecting the Drain Hose

❺ Leveling the Washer

❻ Final Installation Check

⚠ WARNING

- Moving or installation of the appliance requires two or more people. Failure to follow these instructions may result in injury.
- Store and install the appliance where it will not be exposed to temperatures below freezing or exposed to outdoor weather conditions. Failure to follow this warning can cause product or part failure, serious injury, fire, electric shock, or death.
- Properly ground the washer to conform with all governing codes and ordinances. Failure to follow this warning can cause serious injury, fire, electric shock, or death.
- To ensure proper airflow, do not block the large opening on the bottom of the washer with carpeting or other materials.
- Do not remove the ground prong from the power cord. Do not use an adapter or extension cord. Plug into a grounded 3-prong outlet. Failure to follow this warning can cause serious injury, fire, electric shock, or death.

en-us_main.book.book Page 10 Wednesday, December 17, 2025 2:41 PM

⚠ WARNING

- Certain internal parts are intentionally not grounded and may present a risk of electric shock only during servicing. Service personnel- Do not contact the following parts while the appliance is energized: pump, valve, motor, control board.

Tools Needed

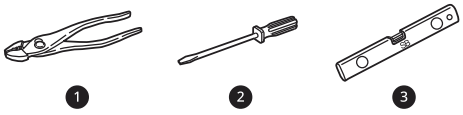

❶ Pliers

❷ Flat-Blade Screwdriver

❸ Level

Choosing the Proper Location

Check the following requirements for the install location before installing the washer.

- Allow for sufficient space between the walls and the washer for installation.
- Make sure that the floor is clean, dry and free of dust, dirt, water and oil so the leveling feet cannot slide easily. Leveling feet that can move or slide on the floor can contribute to excess vibration and noise.
- If the floor has too much flex, reinforce it to make it more rigid. If the floor is not solid, it may cause severe vibration and noise.
- If a drain pan must be used, take extra care to follow the instructions provided with the drain pan and make sure the leveling feet are adjusted for firm and even contact with the pan. Use of drain pans and failure to properly level the washer may result in increased vibration and noise during operation.

Power Outlet

- The power outlet must be within **60 inches (1.5 m)** of either side of the washer.
- Position the washer so that the outlet and plug are easily accessible.
- Do not overload the outlet with more than one appliance.
- The outlet must be grounded in accordance with current electrical wiring codes and regulations.
- Use a time-delay fuse or circuit breaker.
- It is the personal responsibility and obligation of the washer owner to have a proper outlet installed by a qualified electrician.

Flooring

- To minimize noise and vibration, install the washer on a level, solidly constructed floor capable of supporting the washer without flexing or bouncing.
- The washer must be installed on firm flooring to minimize vibration during the spin cycle. Concrete flooring is best, but a wood floor is sufficient, provided it is built to FHA standards.
- The floor under the washer must not slope more than 1 inch (2.5 cm) from front to back or side to side.
- Installing on carpeting and soft tile surfaces is not recommended.
- Never install the washer on a platform or weakly supported structure.

Floor Installation

To ensure sufficient clearance for water inlet hoses, drain hose and airflow, allow minimum clearances of at least **1 inch (2.5 cm)** at the sides and **4 inches (10 cm)** behind the washer. Be sure to allow for wall, door, or floor moldings that may increase the required clearances.

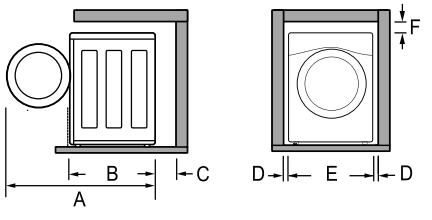

Dimensions and Clearances	
A	55'' (139.6 cm)
B	30 1/4'' (77 cm)
C	4'' (10 cm)
D	1'' (2.5 cm)
E	27'' (70 cm)

en-us_main.book.book Page 11 Wednesday, December 17, 2025 2:41 PM

Dimensions and Clearances	
F	1/4" (0.5 cm)

Stacking or Pedestal Installation

The washer can be stacked under a dryer or on top of a pedestal or pedestal washer.

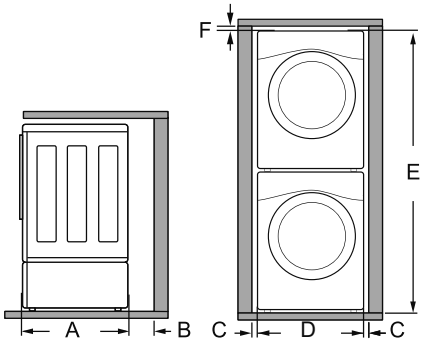

Dimensions and Clearances	
A	30 1/4" (77 cm)
B	4" (10 cm)
C	1" (2.5 cm)
D	27" (70 cm)
E	77 1/2" (196.8 cm)
F	1/4" (0.5 cm)

NOTE

- Refer to the instructions packaged with the optional pedestal kit before stacking appliance on pedestal.
- Do not use a drain pan with a pedestal or pedestal washer installation as it can block the drawer. Using a drain pan may result in increased vibration and noise during operation.

Unpacking and Removing Shipping Material

Remove all shipping materials from the washer for proper operation and inspect it for shipping damage.

⚠ CAUTION

- Failure to remove shipping materials can cause excessive noise and vibration.

Unpacking Shipping Material

*Some models do not ship with drum support.

Lift the washer off the foam base.

- After removing the carton and shipping material, lift the washer off the foam base.
- Make sure the plastic drum support ❶* comes off with the base and is not stuck to the bottom of the washer.
- If you must lay the washer down to remove the carton base ❷, always protect the side of the washer and lay it carefully on its side. Do not lay the washer on its front or back.

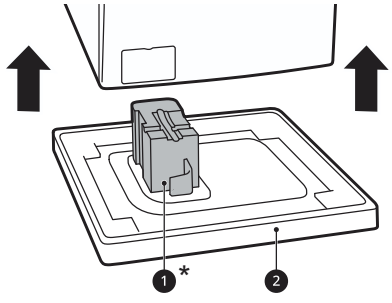

Removing Shipping Material

1 Remove the bolt assemblies.

- Starting with the bottom two shipping bolts ❸ , use the included wrench to fully loosen all 4 shipping bolts by turning them counterclockwise.
- Remove the bolt assemblies (bolts and retainers) by wiggling them slightly while pulling them out.

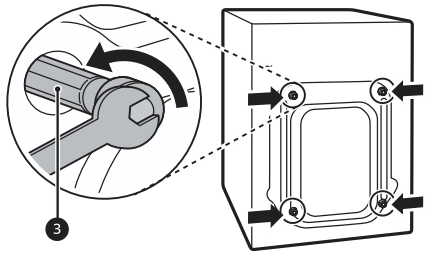

NOTE

- All 4 bolt assemblies must be completely removed from the unit to avoid product damage.
- Make sure to remove the entire bolt assembly, including:
  - metal bolt and washer
  - rubber damper

en-us_main.book.book Page 12 Wednesday, December 17, 2025 2:41 PM

NOTE

- plastic rod

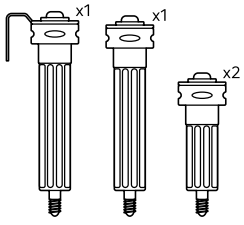

- If reinstalling bolt assemblies for shipping, install the 2 short ones at the top, the long one without a hook at the bottom left, and the long one with a hook at the bottom right.

2 Install the hole caps.

- Locate the hole caps ❹ included in the accessory pack or attached to the back of the washer. Install the caps in the holes left by the bolt assemblies.

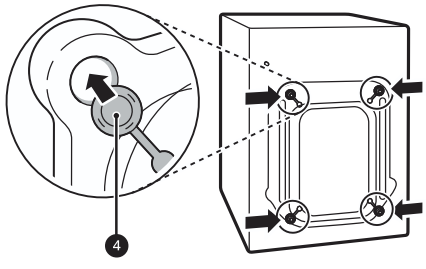

⚠ CAUTION

- Once removed, save the bolt assemblies for future use. To prevent damage to internal components, do not transport the washer without reinstalling the shipping bolts. Failure to remove shipping bolts and retainers may cause severe vibration and noise, which can lead to permanent damage to the washer.

NOTE

- The power cord is secured to the back of the washer with a shipping bolt to help prevent operation with shipping bolts in place.

Connecting the Water Inlet Hoses

To avoid the risk of costly water damage, purchase and install new water inlet hoses when installing the washer.

⚠ WARNING

- Do not overtighten the hoses or cross-thread the hose fittings. Overtightening or cross-threading can damage the valves or couplings, resulting in leaking and property damage.
- Do not reuse old hoses. Use only new hoses when installing the washer. Old hoses could leak or burst causing flooding and property damage. Contact an LG Customer Information Center for assistance in buying hoses.

NOTE

- Periodically check the hoses for cracks, leaks, and wear, and replace the hoses every five years.
- Do not stretch the water hoses intentionally, and make sure that they are not pinched, crushed or kinked by other objects.
- Water supply pressure must be between **20 psi** and **120 psi (138 - 827 kPa)**. If the water supply pressure is more than **120 psi**, a pressure reducing valve must be installed.
- Your hot water heater should be set to deliver water at **120–135 °F (48–57 °C)** to allow the washer to properly control wash temperatures.
- If your water supply contains a lot of debris, a whole home water filter may help to remove the debris from the water before it reaches the washer inlets.
- Do not store or install the washer in a location subject to freezing temperatures. Damage to the water inlet hoses and internal mechanisms of the washer can result. If the washer was exposed to freezing temperatures prior to installation, allow it to stand at room temperature for several hours before use and check for leaks prior to operation.
- Do not use flood-preventing hoses with auto shut off devices. The devices can be tripped during fill and prevent the washer from filling properly.

How to Connect the Water Inlet Hoses

1 Check the fittings and seals. Inspect the threaded fitting on each hose and make sure there is a rubber seal ❶ in place in both ends of each hose to prevent leaking.

en-us_main.book.book Page 13 Wednesday, December 17, 2025 2:41 PM

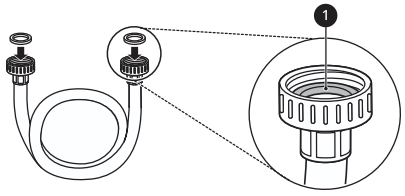

2 Connect the water supply hoses.

- Connect the water inlet hoses to the hot and cold water faucets tightly by hand and then tighten another 2/3 turn with pliers.
- Connect the blue hose to the cold water faucet and the red hose to the hot water faucet.

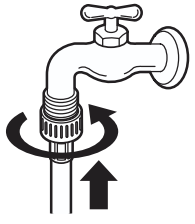

3 Flush out the inlet hoses.

- After the hoses are connected, turn on the water faucets and flush out any foreign substances such as dirt, sand, or sawdust. Foreign substances can damage washer inlets and lead to leakage.
- Let the water drain into a bucket, and check the water temperature to make sure you've connected the hoses to the correct faucets.

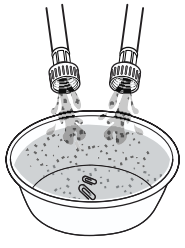

4 Attach the inlet hoses to the back of the washer.

- Attach the hot water inlet hose to the hot water inlet on the back of the washer. Attach the cold water inlet hose to the cold water inlet on the back of the washer.
- Tighten the fittings securely. Turn on both faucets all the way and check for leaks at both ends of the hoses.

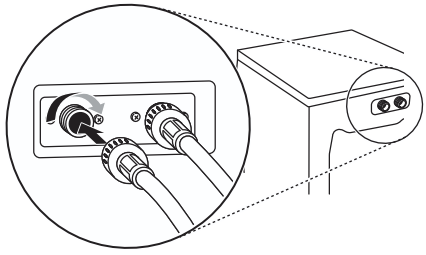

Connecting the Drain Hose

Connect the drain hose to either a standpipe or laundry tub.

⚠ WARNING

- The drain hose should always be properly secured. Failure to properly secure the drain hose can result in flooding and property damage.

NOTE

- The drain must be installed in accordance with any applicable local codes and regulations.
- Make sure that the drain hose is not stretched, pinched, crushed, or kinked.
- The end of the drain hose should be located a minimum of **24" (61 cm)** and a maximum of **96" (244 cm)** above the bottom of the washer.
- For best results, locate the end of the drain hose no higher than **66" (168 cm)** above the bottom of the appliance. As the drain outlet is raised beyond **66" (168 cm)**, the drain function will be increasingly affected during washing or drying.
- Never create an airtight seal between the hose and the drain with tape or other means. If no air gap is present, water can be siphoned out of the drum resulting in poor wash/rinse performance or clothing damage.

Using a Standpipe to Drain

1 Clip the end of the hose into the elbow bracket.

- Connect the elbow bracket ❶ within **4 inches (10 cm)** of the end of the drain hose. If the drain hose is extended more than **4 inches (10 cm)** beyond the end of the elbow bracket, mold or microorganisms could spread to the inside of the washer.

en-us_main.book.book Page 14 Wednesday, December 17, 2025 2:41 PM

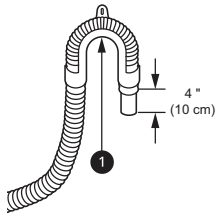

2 Insert the end of the drain hose into the standpipe.

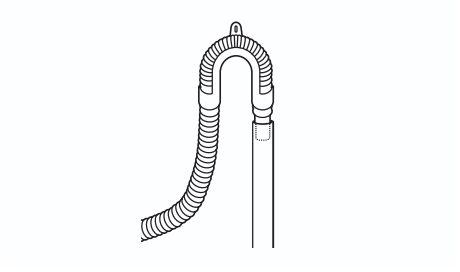

3 Use the provided tie strap ❷ to secure the drain hose in place.

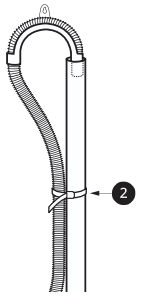

4 If the water valves and drain are built into the wall, fasten the drain hose to one of the water hoses with the provided tie strap ❸ (ribbed side on inside).

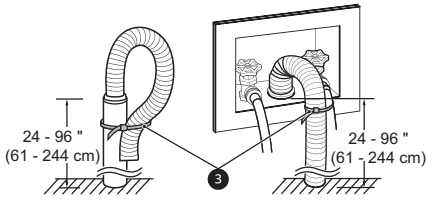

Using the Laundry Tub to Drain

1 Clip the end of the hose into the elbow bracket.

- Connect the elbow bracket ❶ within **4 inches (10 cm)** of the end of the drain hose. If the drain hose is extended more than **4 inches (10 cm)** beyond the end of the elbow bracket, mold or microorganisms could spread to the inside of the washer.

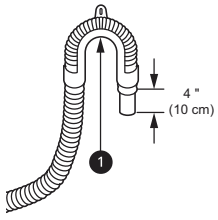

2 Hang the end of the drain hose over the side of the laundry tub.

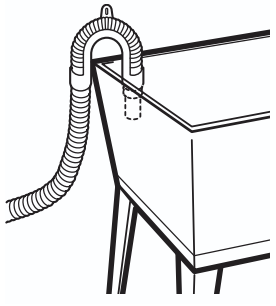

3 Use the provided tie strap to secure the drain hose in place.

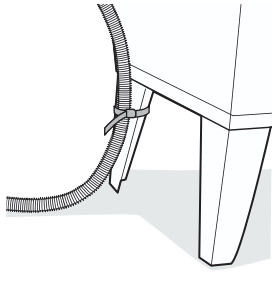

Leveling the Washer

The drum of the washer spins at very high speeds. To minimize vibration, noise, and unwanted movement, the floor must be a solid, level surface.

⚠ CAUTION

- Using the washer without leveling it may cause excess vibration and noise, leading to a washer malfunction.
- Adjust the leveling feet only as far as necessary to level the washer. Extending the leveling feet more than necessary can cause the washer to vibrate.

en-us_main.book.book Page 15 Wednesday, December 17, 2025 2:41 PM

NOTE

- Before installing the washer, make sure that the floor is clean, dry and free of dust, dirt, water and oil so the washer feet cannot slide easily. Feet that move or slide on the floor can contribute to excessive vibration and noise.

How to Level the Washer

1 Position the washer in its final location.

- Take special care not to pinch, strain, or crush the water and drain hoses. If you have a carpenter's level ❶, you can use it to check that the washer is level. The slope beneath the washer should not exceed **1 inch**, and all 4 leveling feet must rest firmly on the floor.

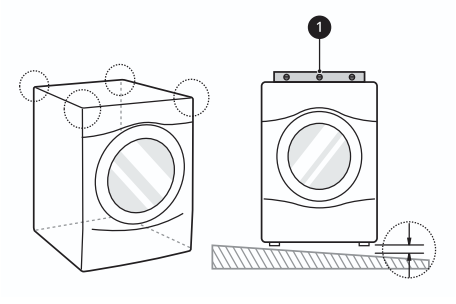

2 Adjust the leveling feet.

- Turn all 4 leveling feet in one direction to raise the washer or the other direction to lower it.

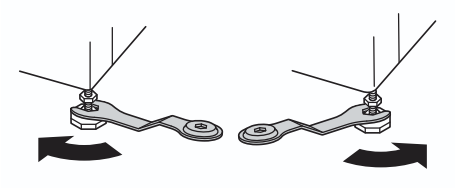

3 Check the level again.

- Push or rock the top edges of the washer gently to make sure the washer does not rock. If the washer rocks, readjust the leveling feet.

4 Tighten the locknuts ❷

- Turn the locknuts counterclockwise and tighten them when the washer is level.

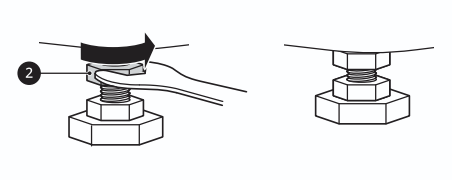

Using Non-Skid Pads

If you install the washer on a slippery surface, it may move because of excessive vibration. Incorrect leveling may cause malfunction through noise and vibration. If this occurs, install the non-skid pads under the leveling feet and adjust the level.

1 Clean the floor to attach the non-skid pads.

- Use a dry rag to remove and clean foreign objects or moisture. If moisture remains, the non-skid pads may slip.

2 Adjust the level after placing the washer in the installation area.

3 Place the adhesive side ❸ of the non-skid pad on the floor.

- It is most effective to install the non-skid pads under the front leveling feet. If it is hard to place the pads under the front leveling feet, place them under the back leveling feet.

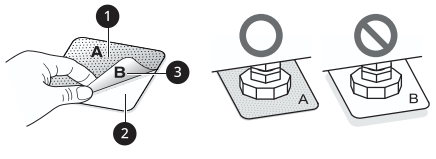

❶ This side up

❷ Remove backing

4 Recheck the washer's levelness.

- Push or rock the top edges of the washer gently to make sure the washer does not rock. If the washer rocks, level the washer again.

en-us_main.book.book Page 16 Wednesday, December 17, 2025 2:41 PM

Final Installation Check

Connecting to the Power Supply

Plug the washer into a **120 V, 60 Hz** grounded 3-prong outlet.

⚠ WARNING

- Do not use a worn or damaged power cord or power plug. Replace or repair it immediately. Failure to do so may result in death, fire, electric shock, or malfunction.
- Do not modify the power cord and plug provided with the appliance. Do not damage it when installing or moving the appliance. Doing so may result in death, fire, electric shock, or malfunction.
- Make sure that the appliance is grounded.
- Connect this appliance to a grounded outlet conforming to the rating prior to use. Failure to do so may result in fire, electric shock, or malfunction.
- Do not damage or cut off the ground prong of the power cord. Doing so may cause death, fire, electric shock, or product malfunction.
- Improper connection of the equipment grounding conductor can result in risk of electric shock. Check with a qualified electrician or service technician if you are in doubt as to whether the appliance is properly grounded. If the plug does not fit the outlet, have a proper outlet installed by a qualified electrician.
- The appliance and outlet must be positioned so that the plug is easily accessible.
- Do not use an adapter or extension cord. Doing so may result in serious injury, fire, electric shock, or death.
- For best performance, plug the appliance into its own individual outlet. This helps prevent overloading house wiring circuits which could cause a fire hazard from overheated wires.
- If necessary, use a new, UL-listed extension cord with a 3-prong (grounding) plug rated at no less than the branch circuit. Do not use an extension cord longer than 3 feet. Failure to follow these warnings may result in serious injury, fire, electric shock, or death.

Testing the Washer

Check if the washer is properly installed and run a test cycle.

1. Load the washer with 6 thick bath towels (approximately 6 pounds).
2. Press the **Power** button.
3. Select the **Downloaded** cycle. The default cycle is **Rinse & Spin**.
4. Press the **Start/Pause** button to start the wash cycle.
5. Make sure that water is supplied, that the washer does not rock or vibrate excessively, and that it drains well during the spin cycle.

NOTE

- If water leaks during water supply, see **Connecting the Water Inlet Hoses** to connect them properly.
- If the washer rocks and vibrates excessively, see **Leveling the Washer** to level it again.
- If the drain does not work, see **Connecting the Drain Hose** to install the hose properly.