Job Name/Location: Tag No:

Date:

PO No.:

For: File Resubmit Approval Other _____

Architect: GC:

Engr: Mech:

Rep:
(Company) (Project Manager)

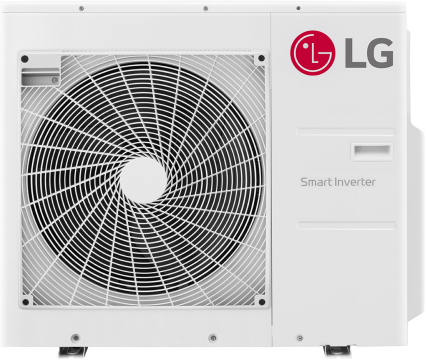

KUMXA301A

R32 Multi F with LGRED° Outdoor Unit

Outdoor Unit (ODU) -KUMXA301A

Performance:

Cooling Capacity (Min.-Rated-Max., Btu/h)	8,400~28,400~34,080
Heating Capacity (Min.-Rated-Max., Btu/h)	10,248~30,000~36,000
Max. Heating Capacity at 17°F (Btu/h)	33,150
Max. Heating Capacity at 5°F (Btu/h)	30,000
Max. Heating Capacity at -4°F (Btu/h)	25,860
Max. Heating Capacity at -13°F (Btu/h)	21,780
Cooling COP @95°F (Rated)	3.67
Heating COP @47°F (Rated)	3.74

Cooling Nominal Test Conditions:
Indoor: 80°F DB / 67°F WB
Outdoor: 95°F DB / 75°F WB

Heating Nominal Test Conditions:
Indoor: 70°F DB / 60°F WB
Outdoor: 47°F DB / 43°F WB

Electrical:

Power Supply (V/Hz/Ø)[1,2]	208-230V, 60, 1
MOP (A)	30
MCA (A)	23.5
Cooling Rated Amps (A)	17.65
Heating Rated Amps (A)	17.65
Compressor (A)	17.0
Fan Motor (A)	0.65
Locked Rotor Amps (A)	23

MOP - Maximum Overcurrent Protection MCA - Minimum Circuit Ampacity

Piping:

Refrigerant Charge (lbs.)	5.29
Liquid Line Connection (in., O.D.)	1/4 x 4
Vapor Line Connection (in., O.D.)	3/8 x 4
Maximum Total Piping[3] (ft.)	246.1
Min. / Max. ODU to IDU Piping (ft.)	9.8 / 82.0
Piping Length (no add'l refrigerant, ft.)	123.0
Additional Refrigerant Charge (oz. / ft.)	0.22
Maximum Elevation between ODU and IDU (ft.)	49.2
Maximum Elevation between IDU and IDU (ft.)	24.6

ODU = Outdoor Unit IDU = Indoor Unit

Features:

- Auto operation / Auto restart
- Inverter (variable speed compressor)
- Integrated central control connection
- Defrost / Deicing
- Restart delay (three [3] minutes)
- Self diagnosis
- Soft start
- Factory-installed drain pan heater
- Low ambient cooling down to 14°F (-4°F with Wind Baffle Kit)

Optional Accessories:

□ Power Distribution Indicator (PDI) Premium - PQNUD1S41
□ Mobile LGMV for Android® Smartphones / Tablets or for iOS® Tablets - PLGMVW100
(Android is a registered trademark of Google LLC. iOS is a registered trademark of Cisco Systems, Inc.)

□ LG Monitoring View (LGMV) for Computers - PRCTIL0
□ Low Ambient Wind Baffle Kit - ZLABGP04A

Controller Options:

□ MultiSITE Communication Mgr.
□ AC Smart 5
□ ACP 5
□ ACP 5 BACnet® Gateway
□ LonWorks® Gateway
BACnet® is a registered trademark of ASHRAE. LonWorks is a registered trademark of Echelon Corp.

Operating Range:

Cooling (°F DB)	14 to 118
Heating (°F WB)	-13 to +64

Unit Data:

Refrigerant Type	R32
Refrigerant Control	EEV
Sound Pressure (Cool / Heat) ±1 dB(A)[4]	52 / 55
Net / Shipping Weight (lbs.)	152.1 / 169.8
Power Wiring from ODU to IDU (No x AWG)[2]	3 x 14
Communication Wiring from ODU to IDU (No x AWG)[2]	2 x 18
Heat Exchanger Coating	Gold Fin™
Minimum No. of Indoor Units	2
Maximum No. of Indoor Units	4

Compressor:

Type	Scroll
Quantity	1
Oil / Type	PVE

Fan:

Type	Axial
Quantity	1
Motor / Drive	Brushless Digitally Controlled/Direct
Max. Airflow Rate (CFM)	2,119

Notes:

1. Acceptable operating voltage: 187V - 253V.
2. All power supply wiring to the outdoor unit is field supplied, solid or stranded. The power wiring and the communication wiring from the outdoor unit to the indoor unit is field supplied and must be stranded, shielded or unshielded (if shielded, it must be grounded to the chassis of the outdoor unit only). All wiring must comply with applicable local and national codes.
   a. Power Supply Wiring to Outdoor Unit (No. x AWG): 3 x 12 for 18k, 24k, and 30k.
   b. Power Wiring and Communication Wiring from Outdoor Unit to Indoor Unit (No. x AWG) 3 x 14 / 2 x 18.
3. Piping lengths are equivalent.
4. Sound pressure levels are tested in an anechoic chamber under ISO Standard 3745.
5. This data is rated 0 ft. above sea level, with 0 ft. level difference between outdoor and indoor units, and the following refrigerant pipe lengths:
KUMXA181A: 16.4 ft. x 2 = 32.8 ft.; KUMXA241A: 16.4 ft. x 3 = 49.2 ft.; KUMXA301A: 16.4 ft. x 4 = 65.6 ft.
6. All capacities are net with a combination ratio between 95 - 105%.
7. Must follow installation instructions in the applicable LG installation manual.
8. Refer to the Combintion Data Manual for combination capacity tables.
9. See the Performance Data Manual for sensible and latent capacities.

ENERGY STAR

C US

AHRI CERTIFIED® www.ahridirectory.org
Unitary Small HP
AHRI Standard 210/240
Certification applies only when the complete system is listed with AHRI.

ENERGY STAR COLD CLIMATE

LGRED°

Proper sizing and installation of equipment is critical to achieve optimal performance. Split system air conditioners and heat pumps (excluding ductless systems) must be matched with appropriate coil components to meet ENERGY STAR® criteria. Ask your contractor for details or visit www.energystar.gov.
(ENERGY STAR and the ENERGY STAR mark are registered trademarks owned by the U.S. Environmental Protection Agency.)

For a complete list of available accessories, contact your LG representative.
For continual product development, LG reserves the right to change specifications without notice.
© LG Electronics U.S.A., Inc., Englewood Cliffs, NJ. All rights reserved. "LG Life's Good" is a registered trademark of LG Corp. /www.lghvac.com

Job Name/Location: _____

KUMXA301A

R32 Multi F with LGRED° Outdoor Unit

Outdoor Unit (ODU) -KUMXA301A

Tag No.: _____

Date: _____

PO No.: _____

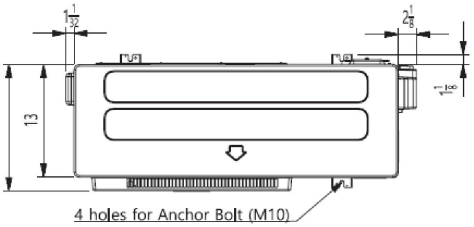

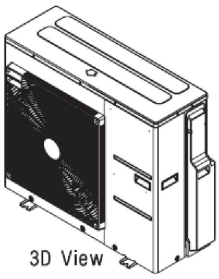

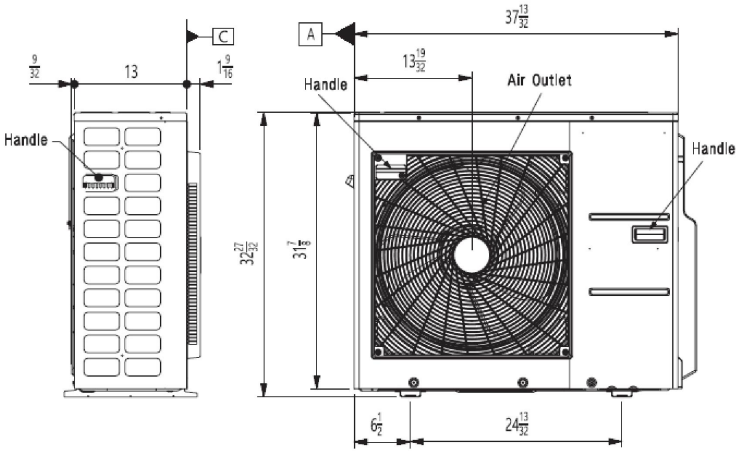

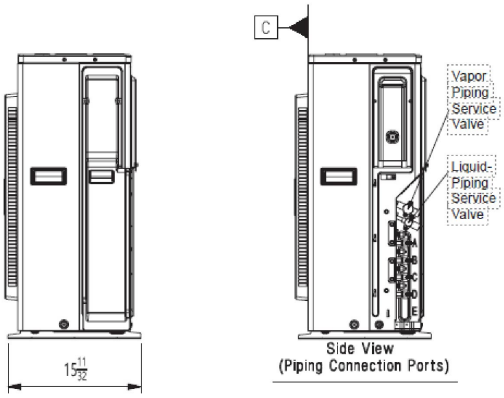

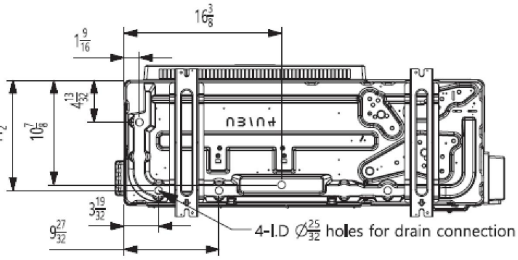

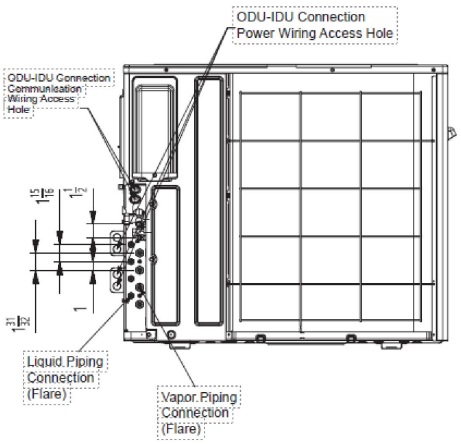

Symbols

- Piping Direction
- A Datum line

Note

1. Unit must be installed in compliance with the installation manual.
2. Unit must be grounded in accordance with the local or state regulations and applicable national codes.
3. All field-supplied electrical components and materials must comply with the local, state, and national codes.
4. Electrical characteristics must be considered for electrical work and design. The capacity of power cable and circuit breaker for the outdoor unit must follow local, state, national, and manufacturer requirements.

For continual product development, LG reserves the right to change specifications without notice.
© LG Electronics U.S.A., Inc., Englewood Cliffs, NJ. All rights reserved. "LG Life's Good" is a registered trademark of LG Corp. /www.lghvac.com

Job Name/Location: Tag No.:

Date:

PO No.:

For: File Resubmit
Approval Other_____

Architect: GC:

Engr: Mech:

Rep:
(Company) (Project Manager)

KNMAB071A
R32 Multi F Wall Mounted High Efficiency Indoor Unit
7,000 Btu/h

Performance:

Nominal Cooling Capacity (Btu/h)	7,000
Nominal Heating Capacity (Btu/h)	8,100

Cooling Nominal Test Conditions:
Indoor: 80°F DB / 67°F WB
Outdoor: 95°F DB / 75°F WB

Heating Nominal Test Conditions:
Indoor: 70°F DB / 60°F WB
Outdoor: 47°F DB / 43°F WB

Electrical:

Power Supply (V/Hz/Ø)[1,2]	208-230/60/1
Rated Current (A)	0.4

Piping:

Installed Liquid Pipe (in., O.D.)	ø1/4
Installed Vapor Pipe (in., O.D.)	ø3/8
Liquid Connection (in., O.D.)	ø1/4
Vapor Connection (in., O.D.)	ø3/8
Drain (in., O.D. / I.D.)	27/32 , 5/8
Temperature Sensor	Thermistor

Controls Features:

- Left / right and up / down auto swing
- 24-Hour on/off timer
- Auto operation
- Auto restart
- Group control
- Inverter (variable speed fan)
- Jet cool / Jet heat
- 3M Micro Dust Filter
- Self-cleaning indoor coil
- Sleep mode
- R32 leak detection sensor
- Built-in Wi-Fi via Smart ThinQ app

Included Accessories:

- Wireless Remote Controller — AKB76044208

Optional Accessories:

□ Auxiliary Heater Kit - PRARS1
□ Single-Port Shutoff Valve - PRHPZ010A

Controller Options:

□ MultiSITE™ CRC* Controllers
□ Simple Remote Controllers
□ Standard III Remote Controllers
□ Deluxe Remote Controller
□ Remote Temperature Button Sensor
□ Dry Contacts

Entering Mixed Air:

Cooling (°F WB)	57 ~ 77
Heating (°F DB)	59 ~ 81

Unit Data:

Refrigerant Type	R32
Refrigerant Control	EEV
Sound Pressure (H/M/L) (±3 dB[A])[3]	35 / 31 / 26
Primary Filter	Washable Pre-filter
Secondary Filter	3M Micro Dust
Net Weight (lbs.)	19.73
Shipping Weight (lbs.)	22.7

Fan:

Type	Cross Flow
Quantity	1
Motor/Drive	Brushless Digitally Controlled/Direct
Air Flow H/M/L (CFM)	254 / 204 / 148
Dehumidification (pts./hr.)	2.65

Notes:

1. Acceptable operating voltage: 187V-253V.
2. The power wiring and the communication wiring from the outdoor unit to the indoor unit, or from the branch distribution unit to the indoor unit is field supplied and must be stranded, shielded or unshielded (if shielded, it must be grounded to the chassis of the outdoor unit only). All wiring must comply with applicable local and national codes.
   a. Power Wiring and Communication Wiring from Outdoor Unit to Indoor Unit (No. x AWG) 3 x 14 / 2 x 18.
   b. Power Wiring and Communication Wiring from Branch Distribution Unit to Indoor Unit (No. x AWG) 3 x 14 / 2 x 18.
3. Sound Pressure levels are tested in an anechoic chamber under ISO Standard 3745.
4. See Engineering Manual for sensible and latent capacities.
5. The indoor unit comes with a dry helium charge.
6. Corresponding refrigerant piping length is in accordance with standard length of each outdoor unit and the level difference is 0 ft. All capacities are net with a combination ratio between 95 - 105%.
7. Must follow installation instructions in the applicable LG installation manual.

C US

AHRI CERTIFIED®
www.ahridirectory.org
Unitary Small HP
AHRI Standard 210/240
Certification applies only when the complete system is listed with AHRI.

For a complete list of available accessories, contact your LG representative.
For continual product development, LG reserves the right to change specifications without notice.
© LG Electronics U.S.A., Inc., Englewood Cliffs, NJ. All rights reserved. "LG Life's Good" is a registered trademark of LG Corp. /www.lghvac.com

Job Name/Location: _____

KNMAB071A

R32 Multi F Wall Mounted High Efficiency Indoor Unit

7,000 Btu/h

Tag No.: _____

Date: _____

PO No.: _____

Unit : Inch (mm)

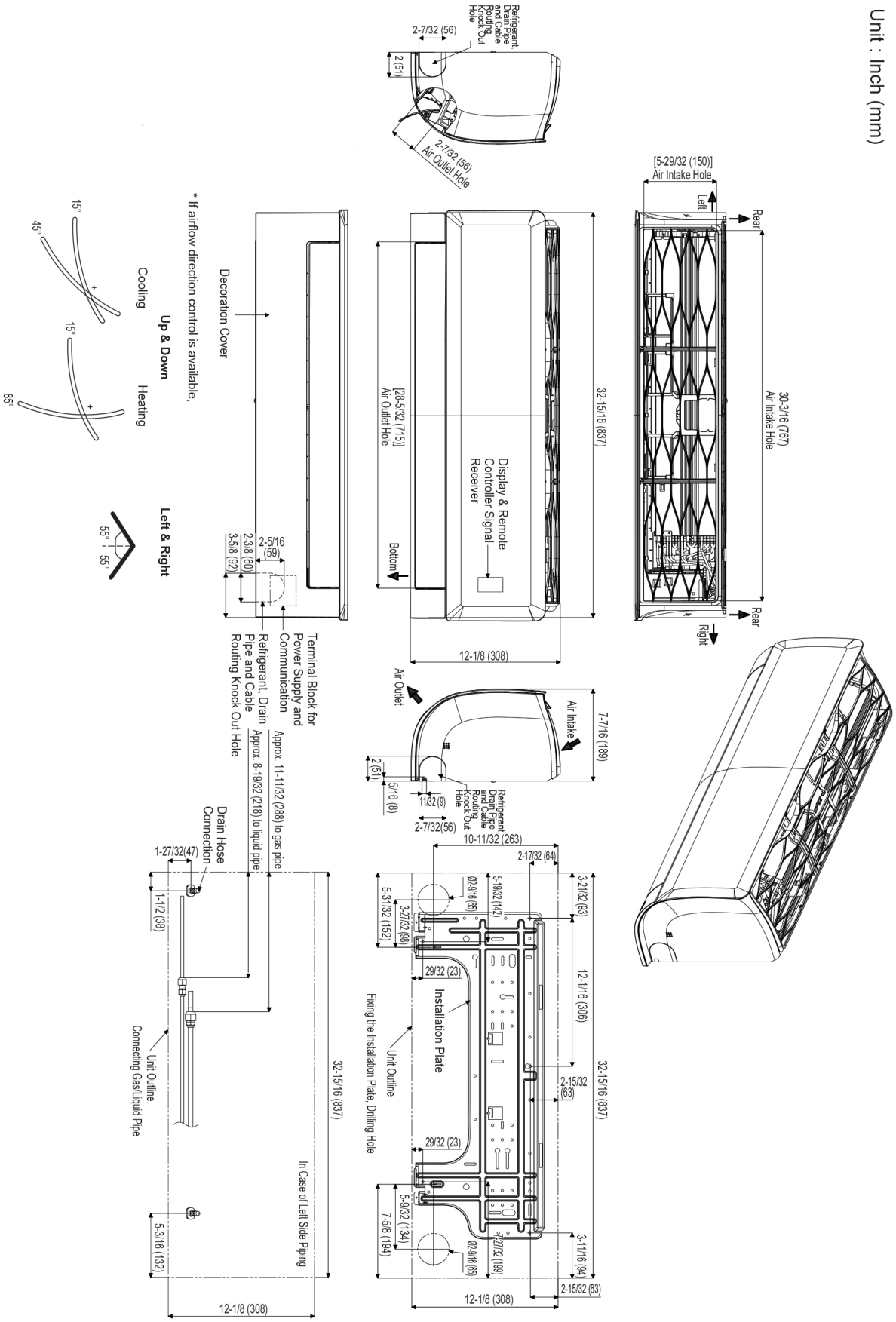

© LG Electronics U.S.A., Inc., Englewood Cliffs, NJ. All rights reserved. "LG Life's Good" is a registered trademark of LG Corp. /www.lghvac.com

Job Name/Location: Tag No.:

Date:

PO No.:

For:	File	Resubmit
	Approval	Other_____

Architect: GC:

Engr: Mech:

Rep:
(Company) (Project Manager)

KNUAB091A
R32 Multi F Wall Mounted High Efficiency Indoor Unit
9,000 Btu/h

Performance:

Nominal Cooling Capacity (Btu/h)	9,000
Nominal Heating Capacity (Btu/h)	10,900

Cooling Nominal Test Conditions:
Indoor: 80°F DB / 67°F WB
Outdoor: 95°F DB / 75°F WB

Heating Nominal Test Conditions:
Indoor: 70°F DB / 60°F WB
Outdoor: 47°F DB / 43°F WB

Entering Mixed Air:

Cooling (°F WB)	57 ~ 77
Heating (°F DB)	59 ~ 81

Electrical:

Power Supply (V/Hz/Ø)[1,2]	208-230/60/1
Rated Current (A)	0.4

Unit Data:

Refrigerant Type	R32
Refrigerant Control	EEV
Sound Pressure (H/M/L) (±3 dB[A])[3]	36 / 32 / 27
Primary Filter	Washable Pre-filter
Secondary Filter	3M Micro Dust
Net Weight (lbs.)	19.73
Shipping Weight (lbs.)	22.7

Piping:

Installed Liquid Pipe (in., O.D.)	ø1/4
Installed Vapor Pipe (in., O.D.)	ø3/8
Liquid Connection (in., O.D.)	ø1/4
Vapor Connection (in., O.D.)	ø3/8
Drain (in., O.D. / I.D.)	27/32 , 5/8
Temperature Sensor	Thermistor

Fan:

Type	Cross Flow
Quantity	1
Motor/Drive	Brushless Digitally Controlled/Direct
Air Flow H/M/L (CFM)	268 / 218 / 169
Dehumidification (pts./hr.)	2.70

Controls Features:
- Left / right and up / down auto swing
- 24-Hour on/off timer
- Auto operation
- Auto restart
- Group control
- Inverter (variable speed fan)
- Jet cool / Jet heat
- 3M Micro Dust Filter
- Self-cleaning indoor coil
- Sleep mode
- R32 leak detection sensor
- Built-in Wi-Fi via Smart ThinQ app
- Compatible with applicable Single Zone Outdoor Units (see single zone literature for matching system details)

Notes:
1. Acceptable operating voltage: 187V-253V.
2. The power wiring and the communication wiring from the outdoor unit to the indoor unit, or from the branch distribution unit to the indoor unit is field supplied and must be stranded, shielded or unshielded (if shielded, it must be grounded to the chassis of the outdoor unit only). All wiring must comply with applicable local and national codes.
   a. Power Wiring and Communication Wiring from Outdoor Unit to Indoor Unit (No. x AWG) 3 x 14 / 2 x 18.
   b. Power Wiring and Communication Wiring from Branch Distribution Unit to Indoor Unit (No. x AWG) 3 x 14 / 2 x 18.
3. Sound Pressure levels are tested in an anechoic chamber under ISO Standard 3745.
4. See Engineering Manual for sensible and latent capacities.
5. The indoor unit comes with a dry helium charge.
6. Corresponding refrigerant piping length is in accordance with standard length of each outdoor unit and the level difference is 0 ft. All capacities are net with a combination ratio between 95 - 105%.
7. Must follow installation instructions in the applicable LG installation manual.

Included Accessories:
- Wireless Remote Controller — AKB76044208

Optional Accessories:
□ Auxiliary Heater Kit - PRARS1
□ Single-Port Shutoff Valve - PRHPZ010A

Controller Options:
□ MultiSITE™ CRC* Controllers
□ Simple Remote Controllers
□ Standard III Remote Controllers
□ Deluxe Remote Controller
□ Remote Temperature Button Sensor
□ Dry Contacts

C US

AHRI CERTIFIED®
www.ahridirectory.org
Unitary Small HP
AHRI Standard 210/240
Certification applies only when the complete system is listed with AHRI.

For a complete list of available accessories, contact your LG representative.
For continual product development, LG reserves the right to change specifications without notice.
© LG Electronics U.S.A., Inc., Englewood Cliffs, NJ. All rights reserved. "LG Life's Good" is a registered trademark of LG Corp. /www.lghvac.com

Job Name/Location: _____

KNUAB091A

R32 Multi F Wall Mounted High Efficiency Indoor Unit

9,000 Btu/h

Tag No.: _____

Date: _____

PO No.: _____

Unit : Inch (mm)

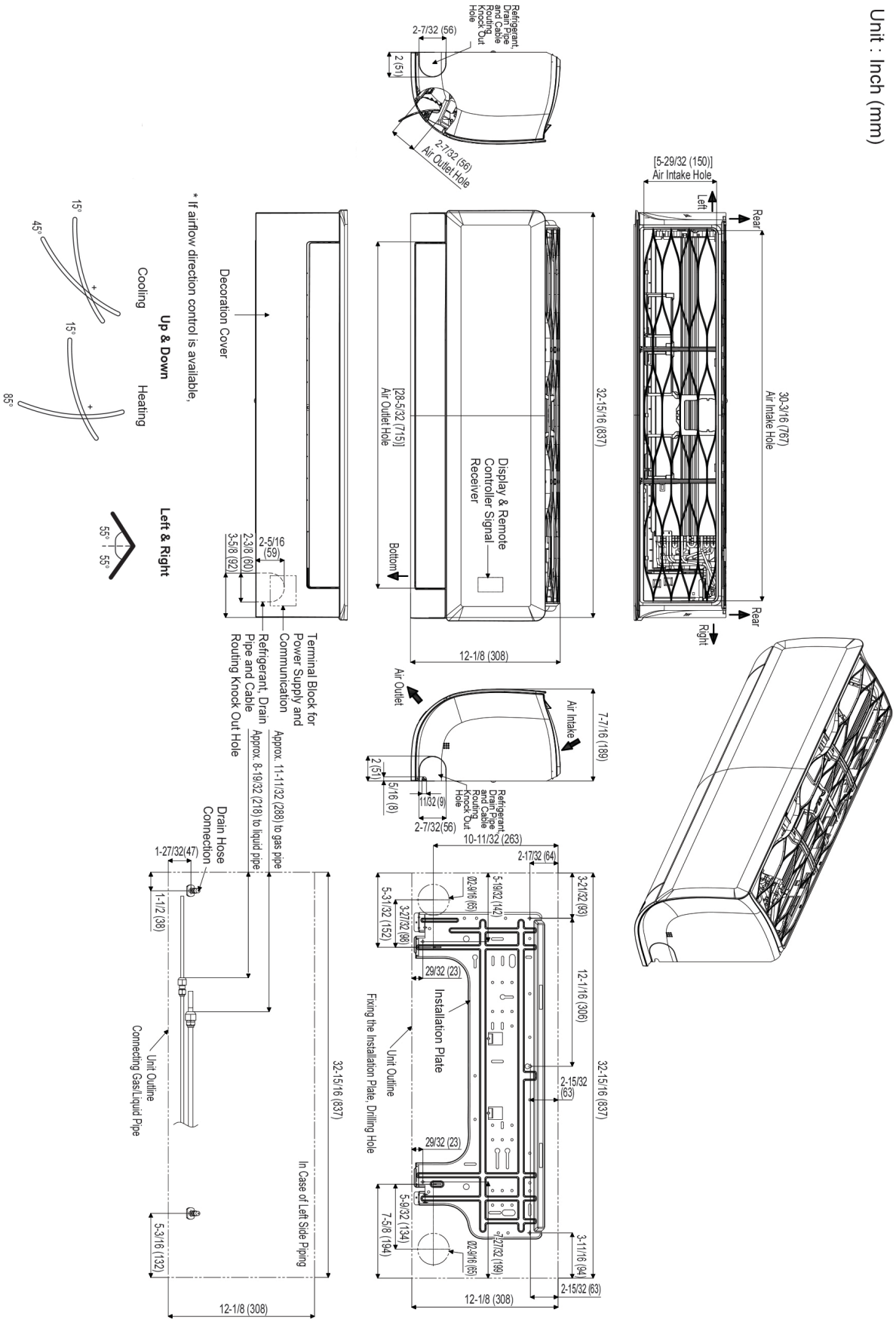

For continual product development, LG reserves the right to change specifications without notice.
© LG Electronics U.S.A., Inc., Englewood Cliffs, NJ. All rights reserved. "LG Life's Good" is a registered trademark of LG Corp. /www.lghvac.com

Job Name/Location: Tag No.:

Date:

PO No.:

For: File Resubmit
Approval Other_____

Architect: GC:

Engr: Mech:

Rep:
(Company) (Project Manager)

KNUAB121A
R32 Multi F Wall Mounted High Efficiency Indoor Unit
12,000 Btu/h

Performance:

Nominal Cooling Capacity (Btu/h)	12,000
Nominal Heating Capacity (Btu/h)	13,600

Cooling Nominal Test Conditions:
Indoor: 80°F DB / 67°F WB
Outdoor: 95°F DB / 75°F WB

Heating Nominal Test Conditions:
Indoor: 70°F DB / 60°F WB
Outdoor: 47°F DB / 43°F WB

Electrical:

Power Supply (V/Hz/Ø)[1,2]	208-230/60/1
Rated Current (A)	0.4

Piping:

Installed Liquid Pipe (in., O.D.)	ø1/4
Installed Vapor Pipe (in., O.D.)	ø3/8
Liquid Connection (in., O.D.)	ø1/4
Vapor Connection (in., O.D.)	ø3/8
Drain (in., O.D. / I.D.)	27/32 , 5/8
Temperature Sensor	Thermistor

Controls Features:

- Left / right and up / down auto swing
- 24-Hour on/off timer
- Auto operation
- Auto restart
- Group control
- Inverter (variable speed fan)
- Jet cool / Jet heat
- 3M Micro Dust Filter
- Self-cleaning indoor coil
- Sleep mode
- R32 leak detection sensor
- Built-in Wi-Fi via Smart ThinQ app
- Compatible with applicable Single Zone Outdoor Units (see single zone literature for matching system details)

Included Accessories:

- Wireless Remote Controller — AKB76044208

Optional Accessories:

□ Auxiliary Heater Kit - PRARS1
□ Single-Port Shutoff Valve - PRHPZ010A

Controller Options:

□ MultiSITE™ CRC* Controllers
□ Simple Remote Controllers
□ Standard III Remote Controllers
□ Deluxe Remote Controller
□ Remote Temperature Button Sensor
□ Dry Contacts

Entering Mixed Air:

Cooling (°F WB)	57 ~ 77
Heating (°F DB)	59 ~ 81

Unit Data:

Refrigerant Type	R32
Refrigerant Control	EEV
Sound Pressure (H/M/L) (±3 dB[A])[3]	38 / 34 / 29
Primary Filter	Washable Pre-filter
Secondary Filter	3M Micro Dust
Net Weight (lbs.)	19.73
Shipping Weight (lbs.)	22.7

Fan:

Type	Cross Flow
Quantity	1
Motor/Drive	Brushless Digitally Controlled/Direct
Air Flow H/M/L (CFM)	282 / 233 / 177
Dehumidification (pts./hr.)	2.75

Notes:

1. Acceptable operating voltage: 187V-253V.
2. The power wiring and the communication wiring from the outdoor unit to the indoor unit, or from the branch distribution unit to the indoor unit is field supplied and must be stranded, shielded or unshielded (if shielded, it must be grounded to the chassis of the outdoor unit only). All wiring must comply with applicable local and national codes.
   a. Power Wiring and Communication Wiring from Outdoor Unit to Indoor Unit (No. x AWG) 3 x 14 / 2 x 18.
   b. Power Wiring and Communication Wiring from Branch Distribution Unit to Indoor Unit (No. x AWG) 3 x 14 / 2 x 18.
3. Sound Pressure levels are tested in an anechoic chamber under ISO Standard 3745.
4. See Engineering Manual for sensible and latent capacities.
5. The indoor unit comes with a dry helium charge.
6. Corresponding refrigerant piping length is in accordance with standard length of each outdoor unit and the level difference is 0 ft. All capacities are net with a combination ratio between 95 - 105%.
7. Must follow installation instructions in the applicable LG installation manual.

C US

AHRI CERTIFIED®
www.ahridirectory.org
Unitary Small HP
AHRI Standard 210/240
Certification applies only when the complete system is listed with AHRI.

For a complete list of available accessories, contact your LG representative.
For continual product development, LG reserves the right to change specifications without notice.
© LG Electronics U.S.A., Inc., Englewood Cliffs, NJ. All rights reserved. "LG Life's Good" is a registered trademark of LG Corp. /www.lghvac.com

Job Name/Location: _____

KNUAB121A

R32 Multi F Wall Mounted High Efficiency Indoor Unit

12,000 Btu/h

Tag No.: _____

Date: _____

PO No.: _____

Unit : Inch (mm)

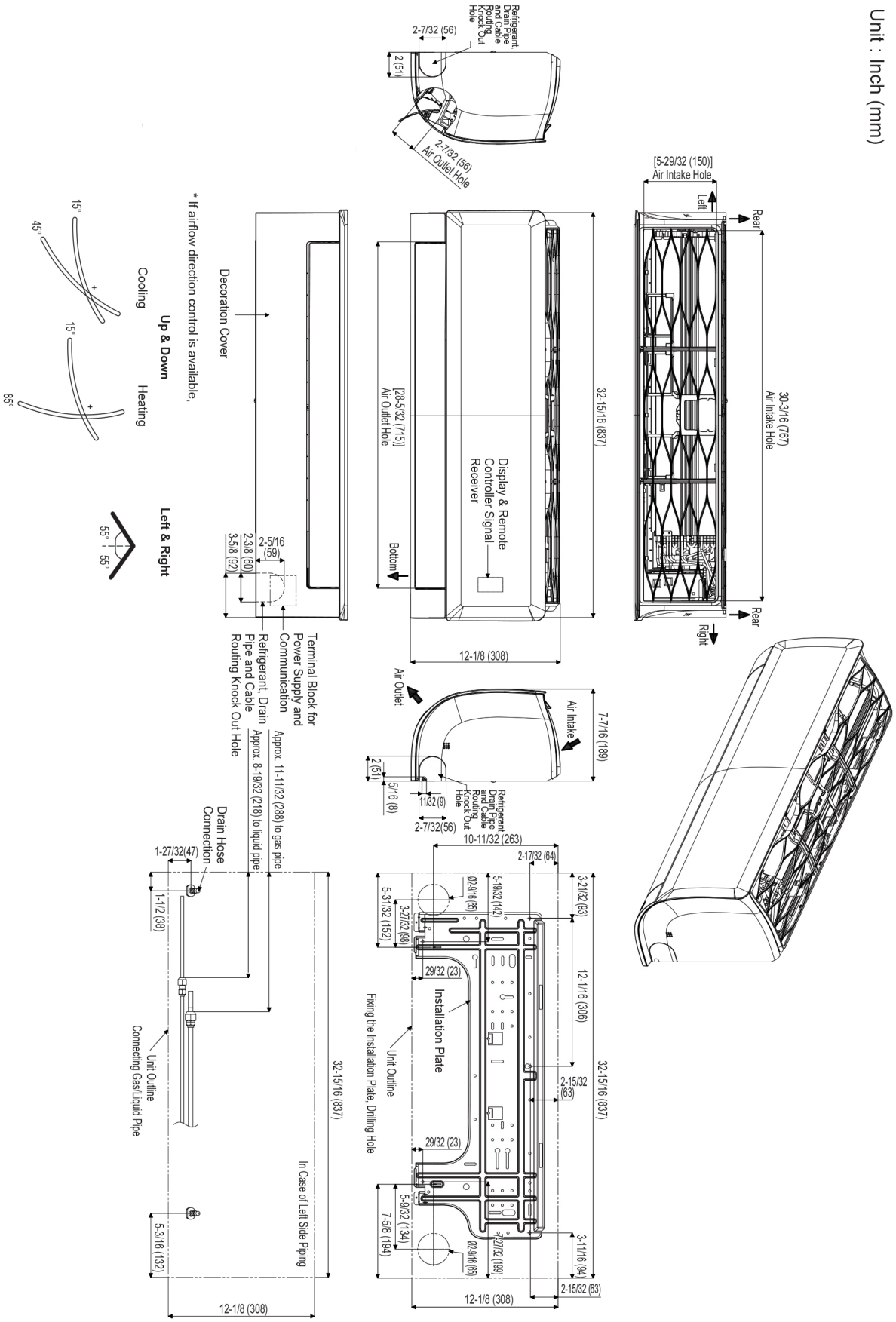

For continual product development, LG reserves the right to change specifications without notice.
© LG Electronics U.S.A., Inc., Englewood Cliffs, NJ. All rights reserved. "LG Life's Good" is a registered trademark of LG Corp. /www.lghvac.com