CAUTION

Refer to the Owner's Manual for details.
When opening the door and taking out accessories, the door may close abruptly. Take care not to catch fingers in the door.

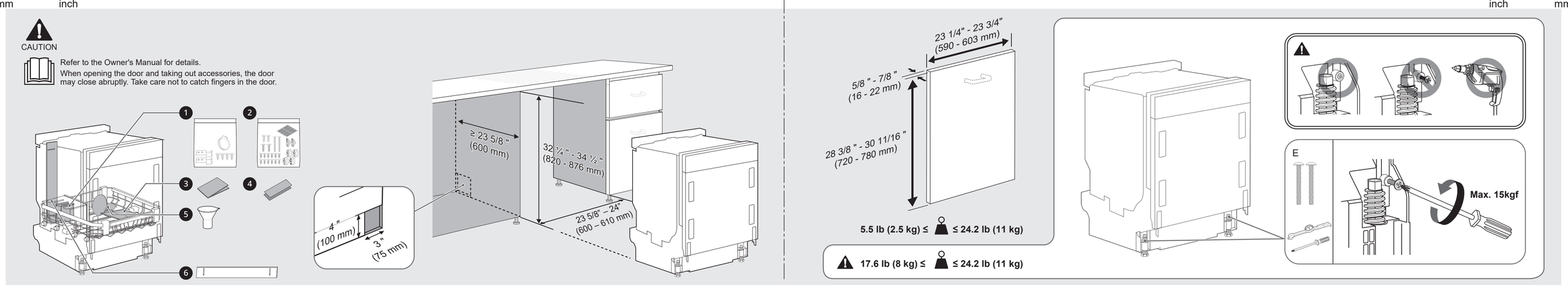

Required Tools

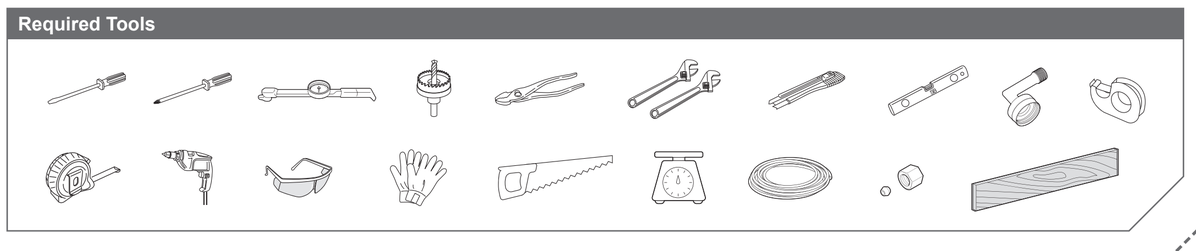

Included Accessories

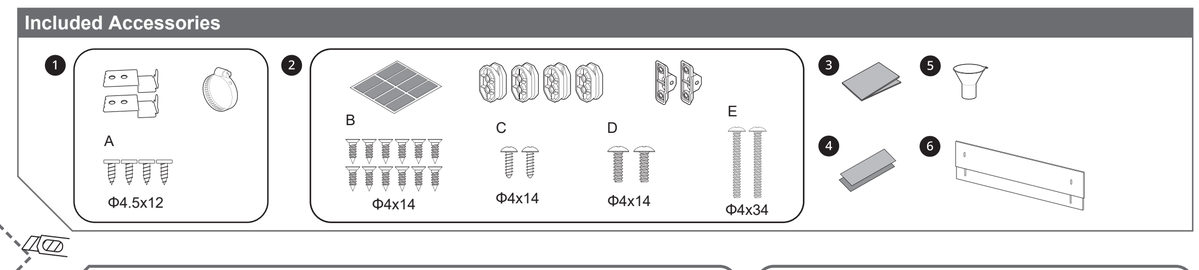

1

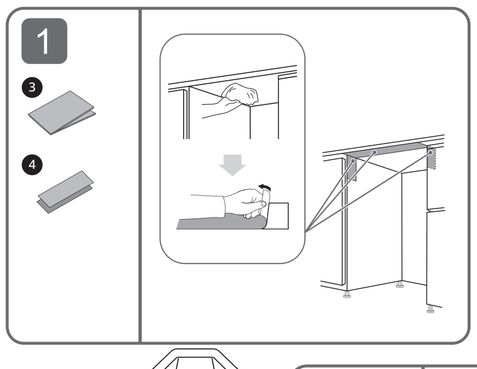

2

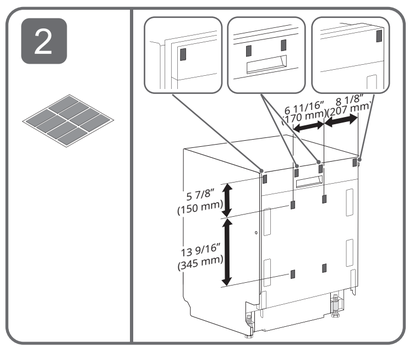

3

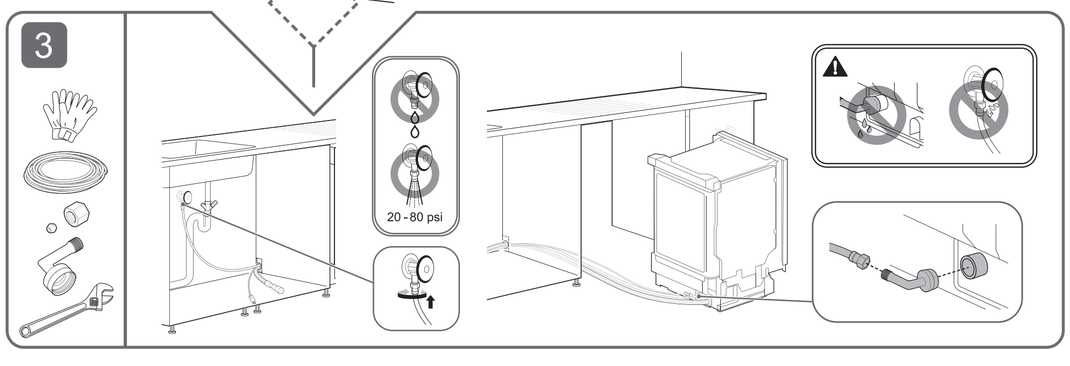

4

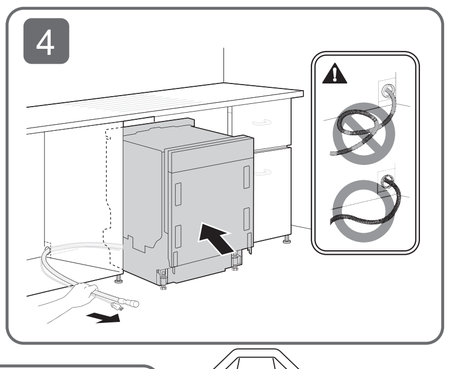

5

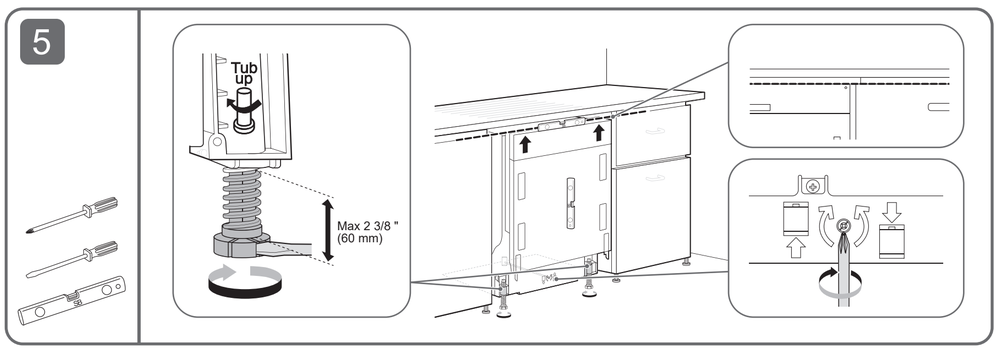

6

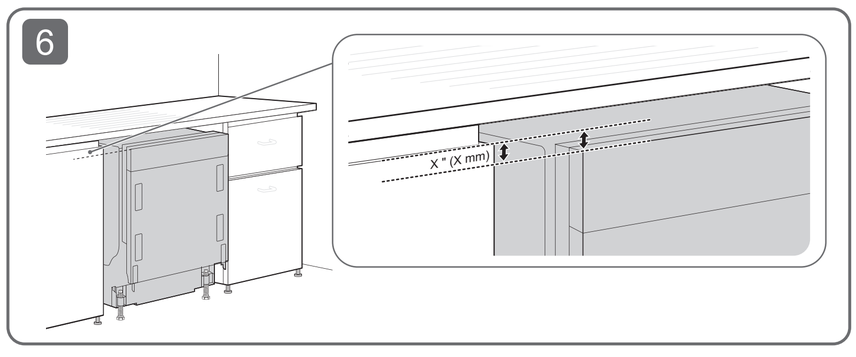

7

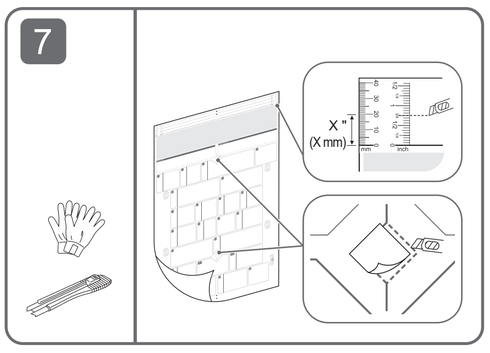

8

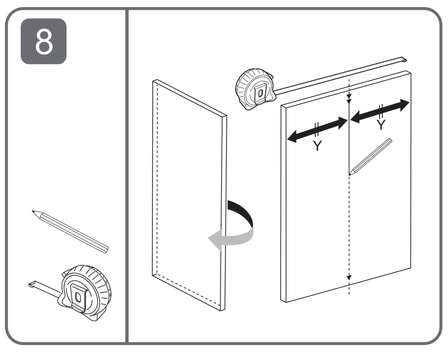

9

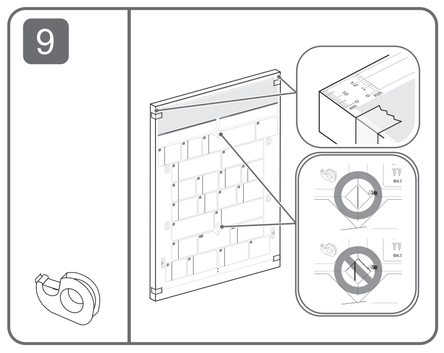

10

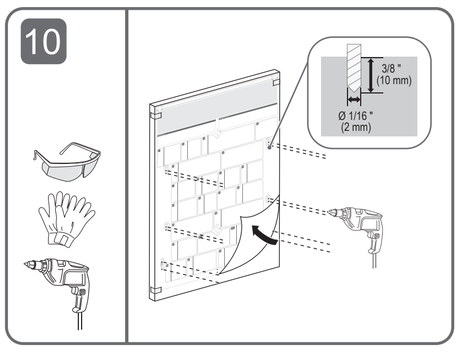

11

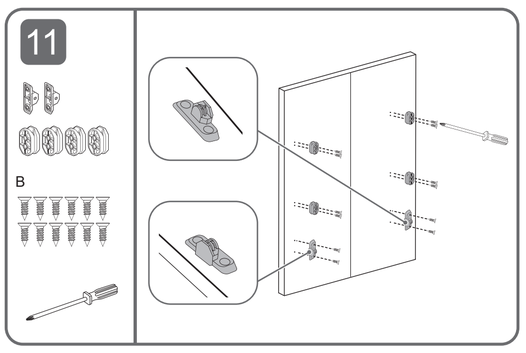

12

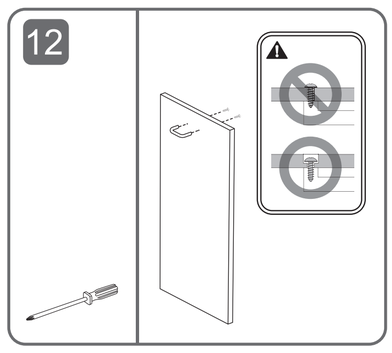

13

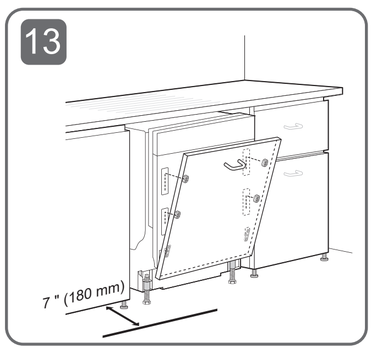

14

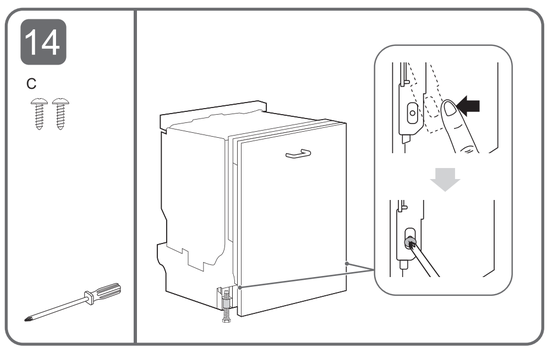

15

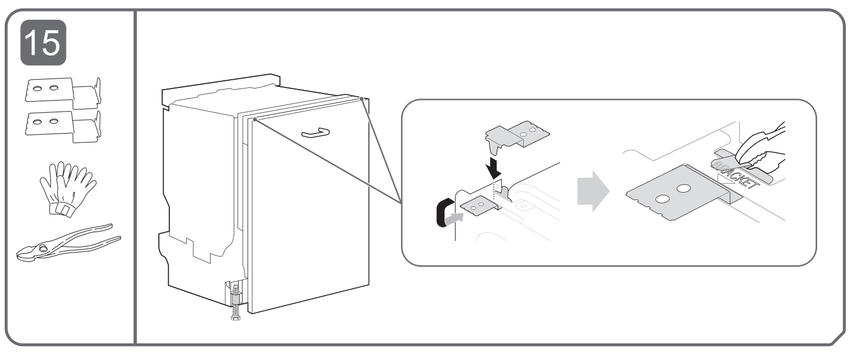

16

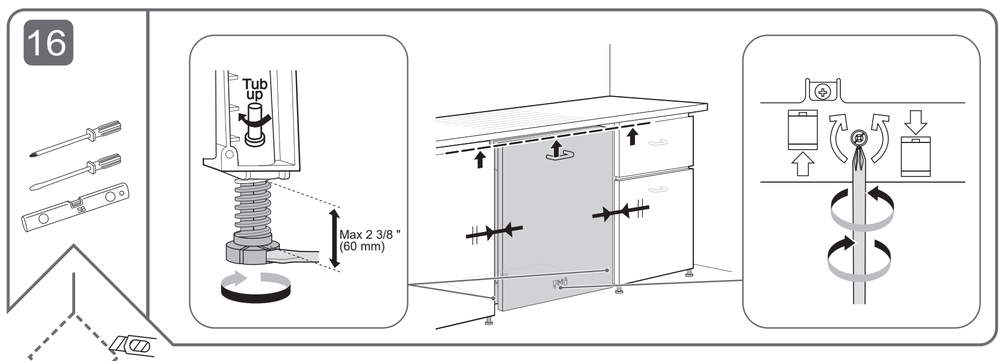

17

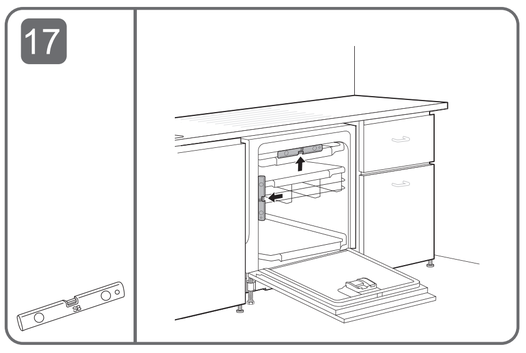

18-1

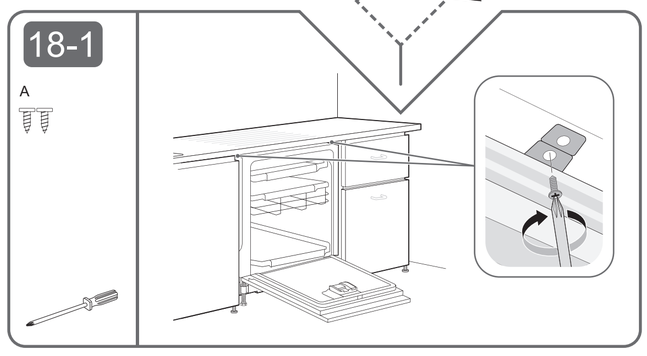

18-2

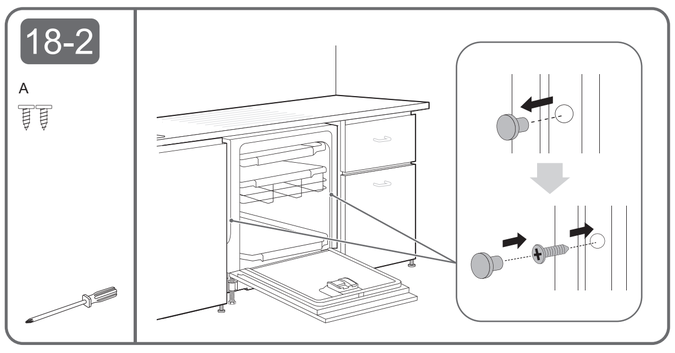

19

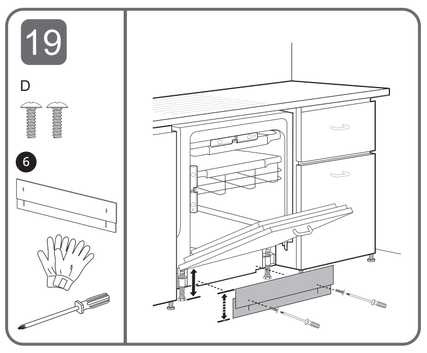

20

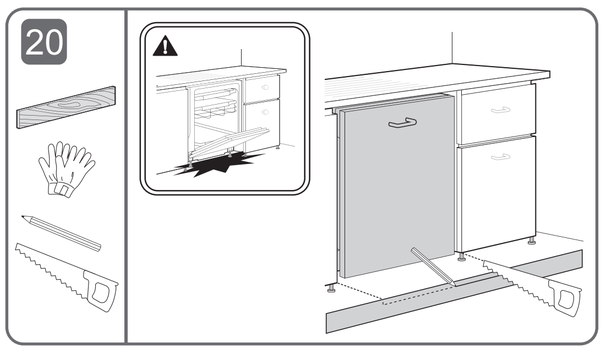

21

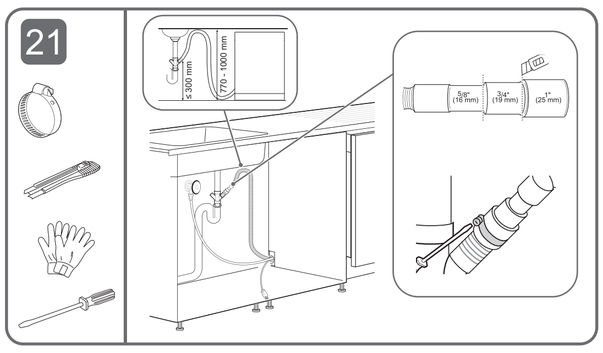

22

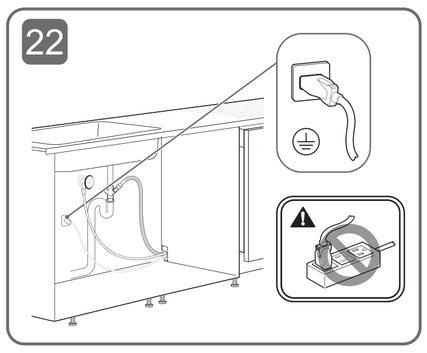

MHK50326534