56187-001
Rev 01

English

aura™ REACH

BLUETOOTH AND MATTER ENABLED SMART LOCK

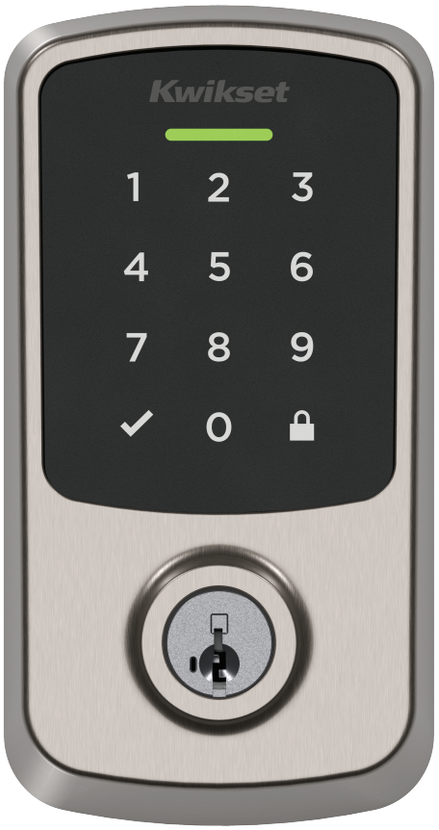

Installation and Reference Guide

Welcome to the Kwikset family!

This guide will get you up and running with your new Aura Reach.

If you have any issues, please visit our support center: **kwikset.com/support** or call us at 1-800-327-5625.

Getting started

For an interactive version of this installation guide, please download the Kwikset app:

kwikset.com/app

Download on the App Store

GET IT ON Google Play

Kwikset
1 2 3
4 5 6
7 8 9
✓ 0

Table of contents

Parts in the box 4

Required tools 5

Installation 7

Download the app 16

Reference guide 18

Parts in the box

Exterior assembly

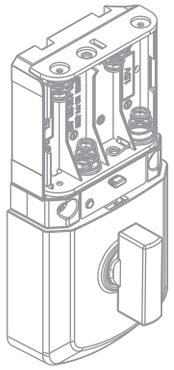

Interior assembly

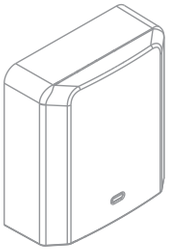

Interior cover

Box 1

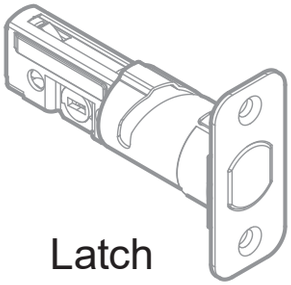

Latch

Collar

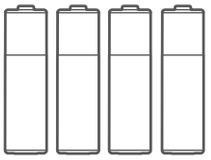

Batteries

03809

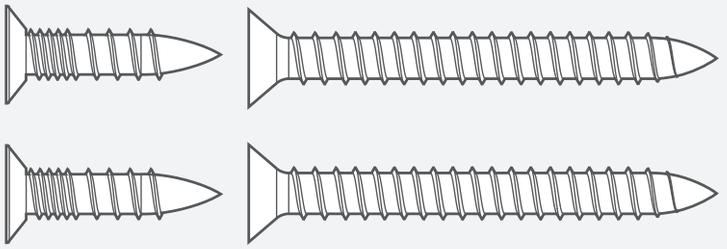

Box 2

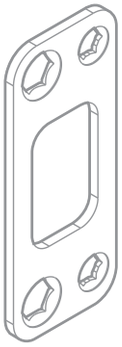

Strike

52531

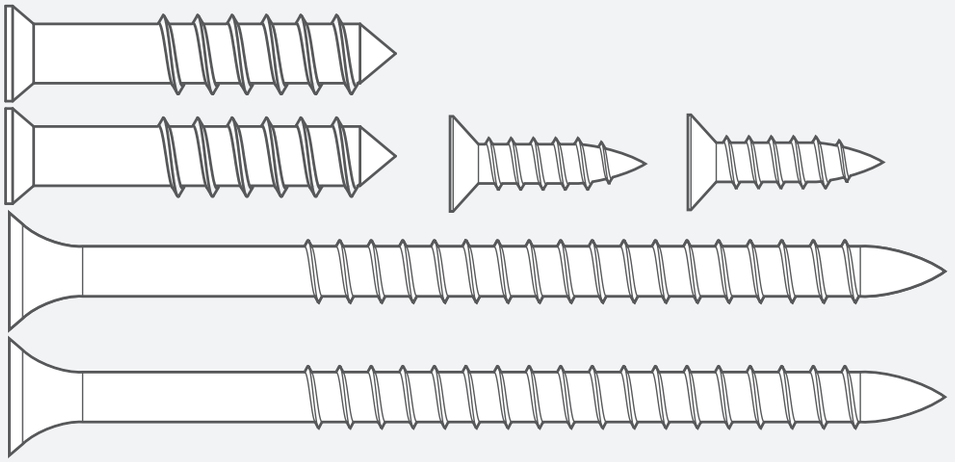

Box 3

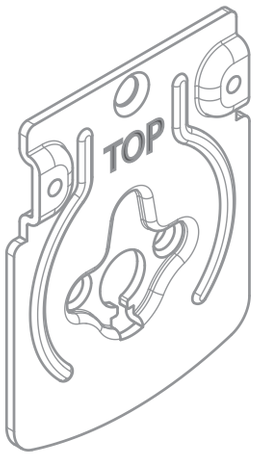

Mounting plate

52367

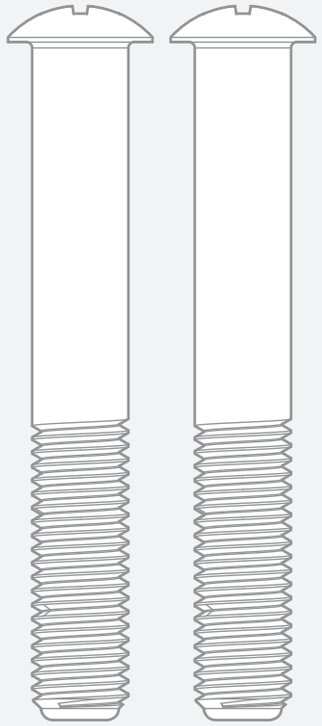

52502

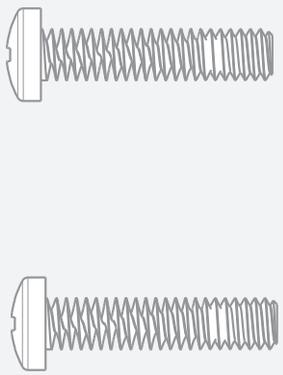

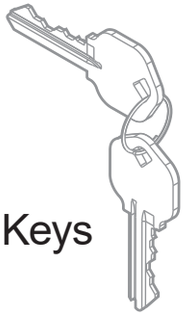

Keys

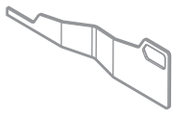

SmartKey™ tool

Required tools

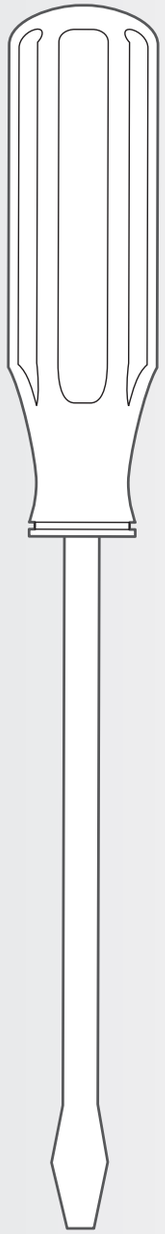

Flat head screwdriver

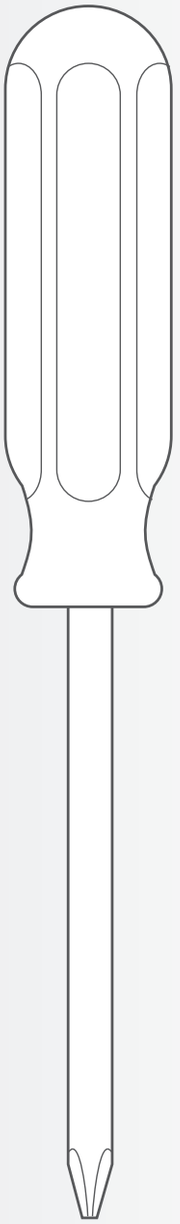

Phillips head screwdriver

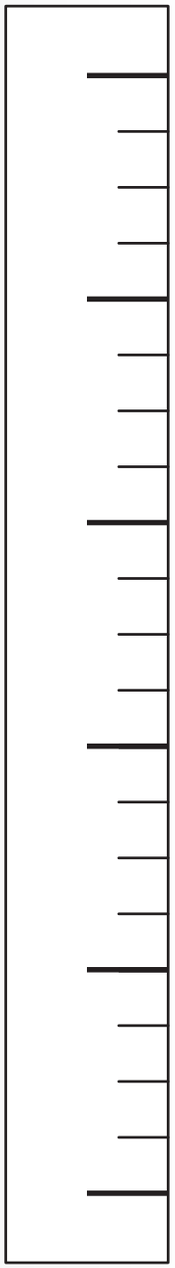

Ruler

⚠ No electric drills

Installation

! Remove your existing deadbolt

Your new lock will only support a door thickness of 1-3/8" to 2-1/4" (35mm to 57mm) and a door bore hole diameter of 1-1/2" or 2-1/8" (38mm or 54mm).

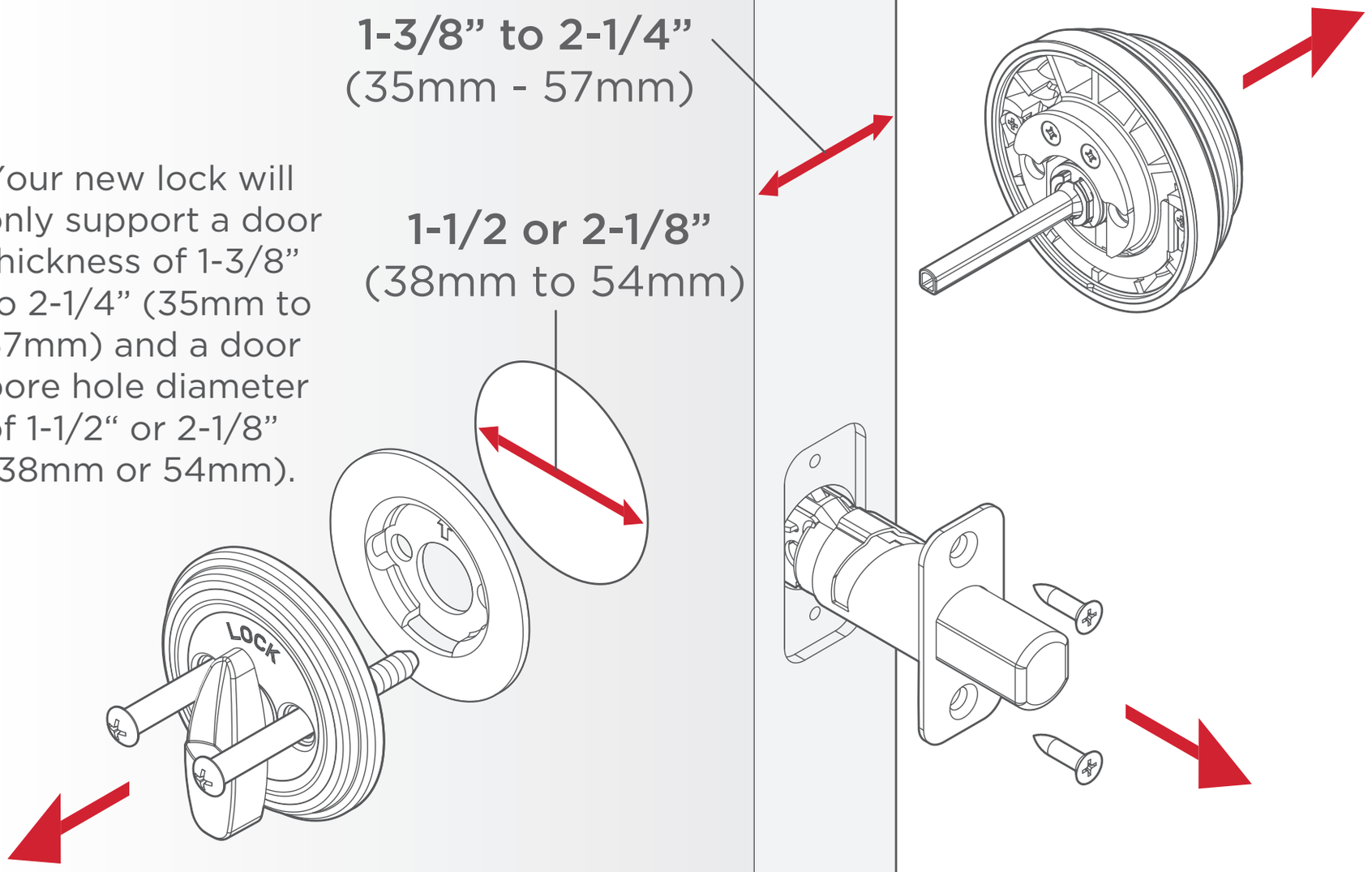

If drilling a new door, use the supplied template and instructions available at: **kwikset.com/doorprep**

1 Install the latch

A UP is on top.

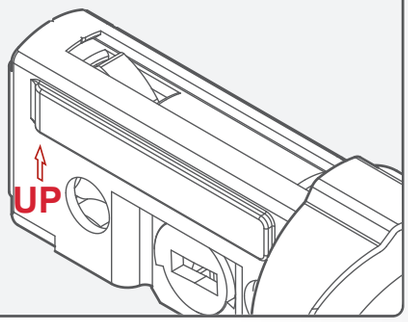

B If the rectangle shaped hole is not centered in the door hole, rotate the latch face to extend the latch.

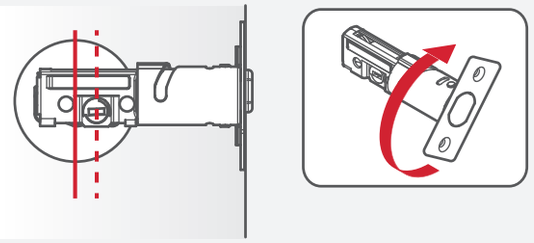

[OUTSIDE]

*Use the longer screws if the holes are worn out.

You will have two extra screws.

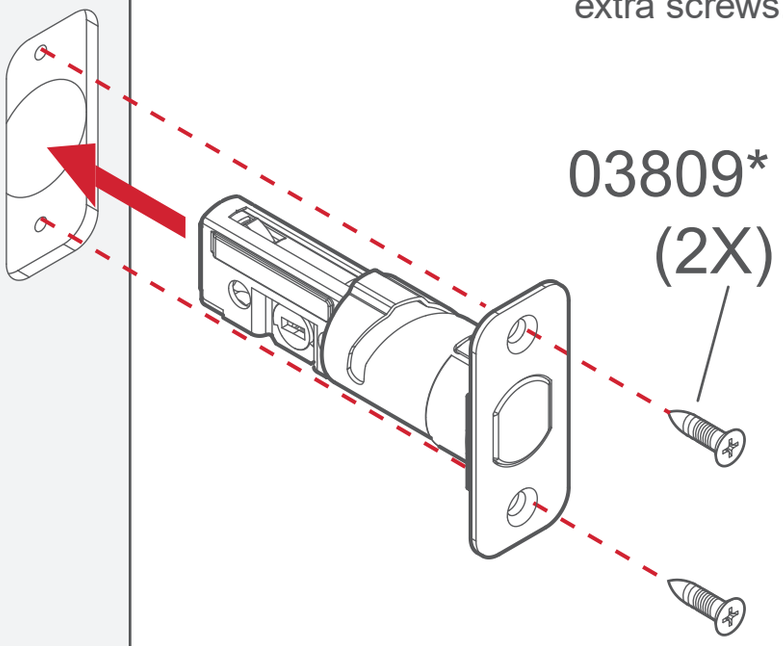

⚠ If your door is not chiseled, install the drive-in collar.

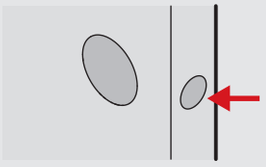

Loosen faceplate with flathead screwdriver.

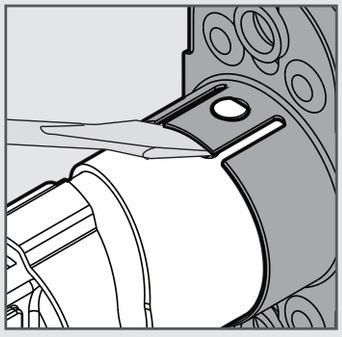

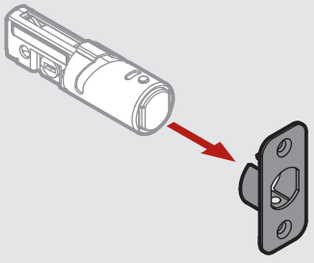

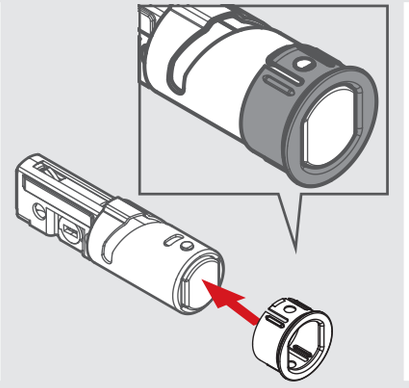

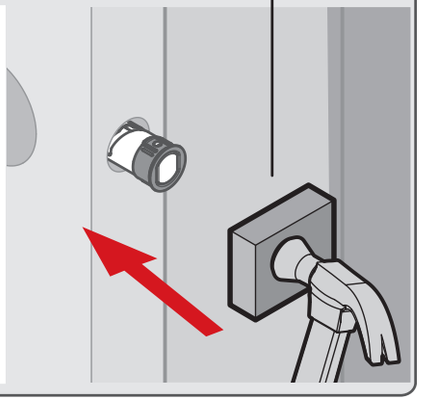

2 Install the strike

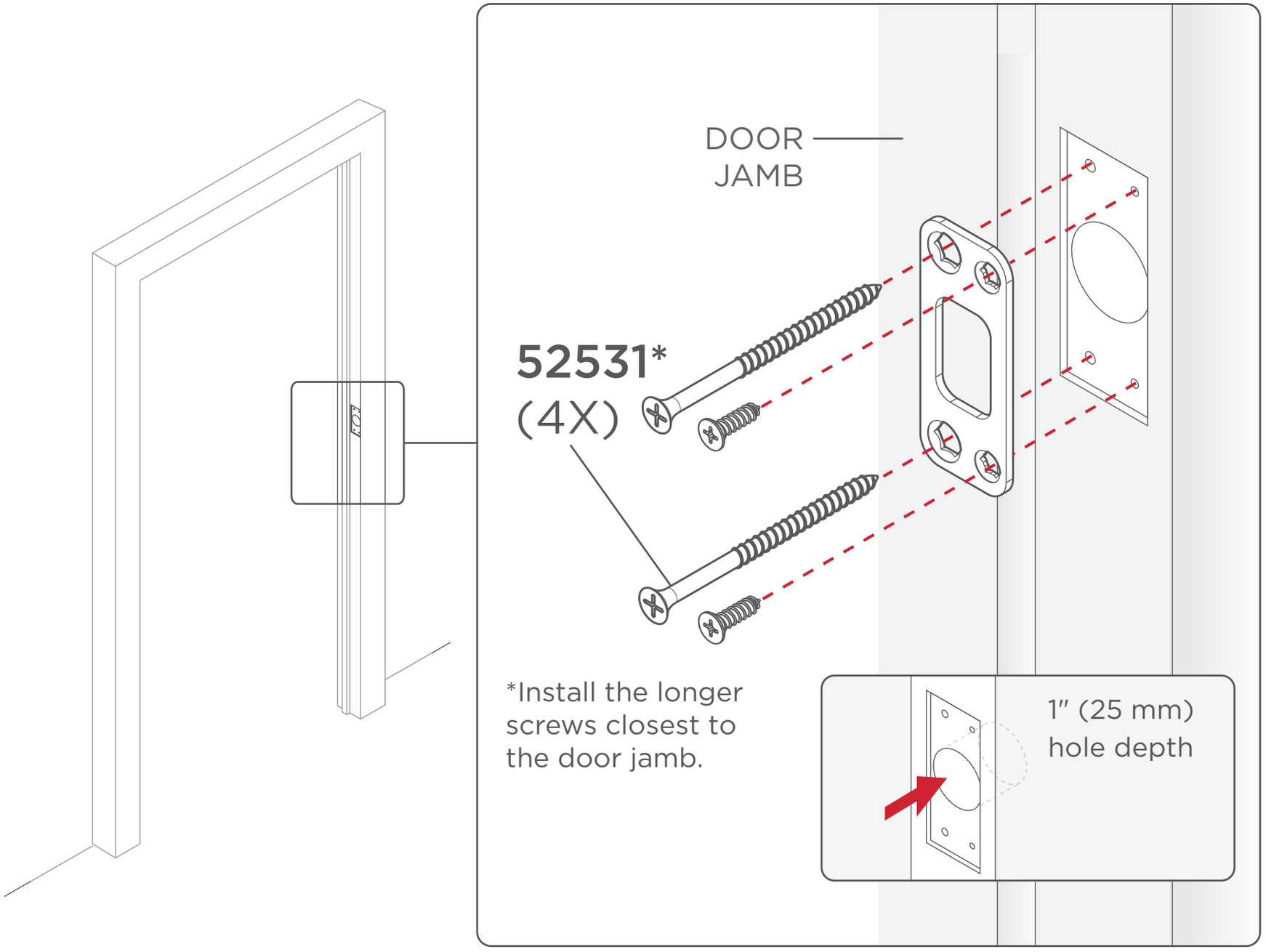

3 Install the exterior assembly

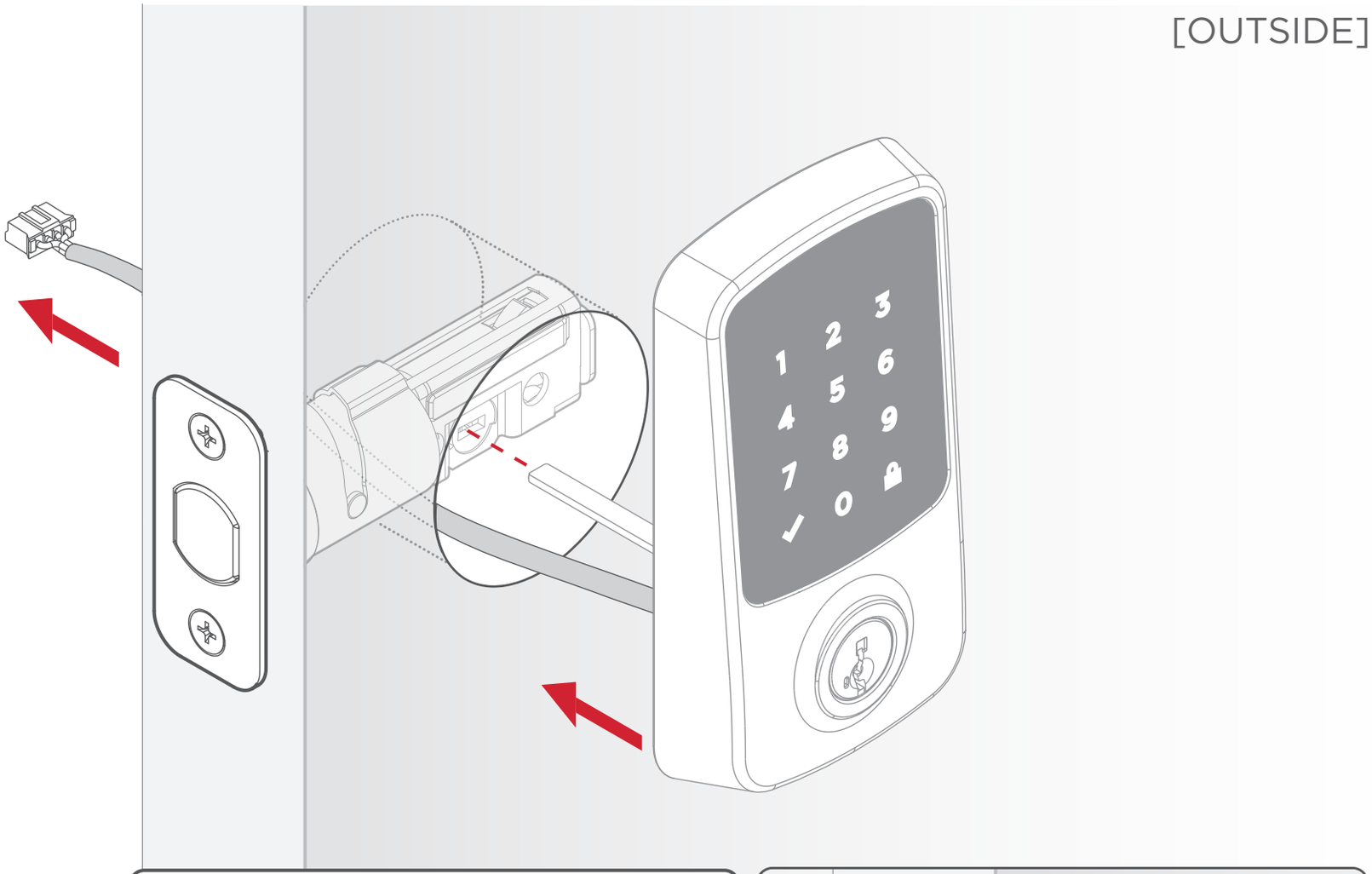

Remove adapter ring if bore hole measures 1-1/2" (38mm) diameter.

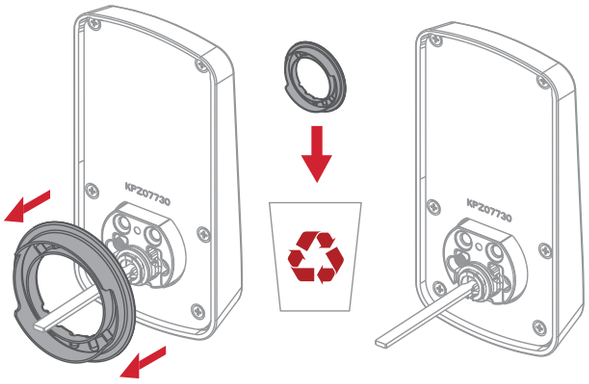

A Cable goes under the latch.

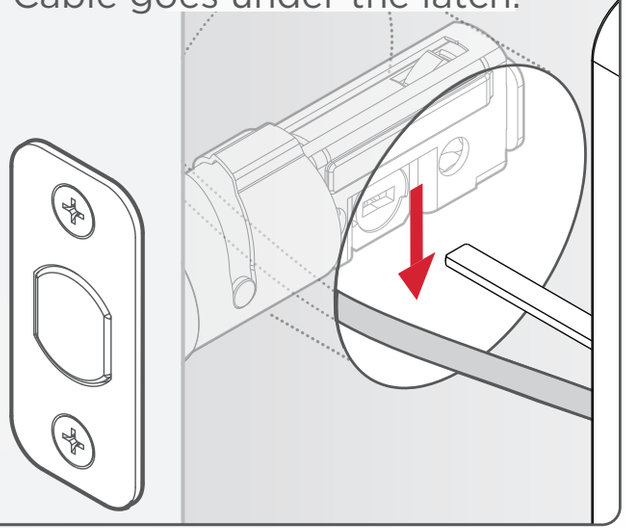

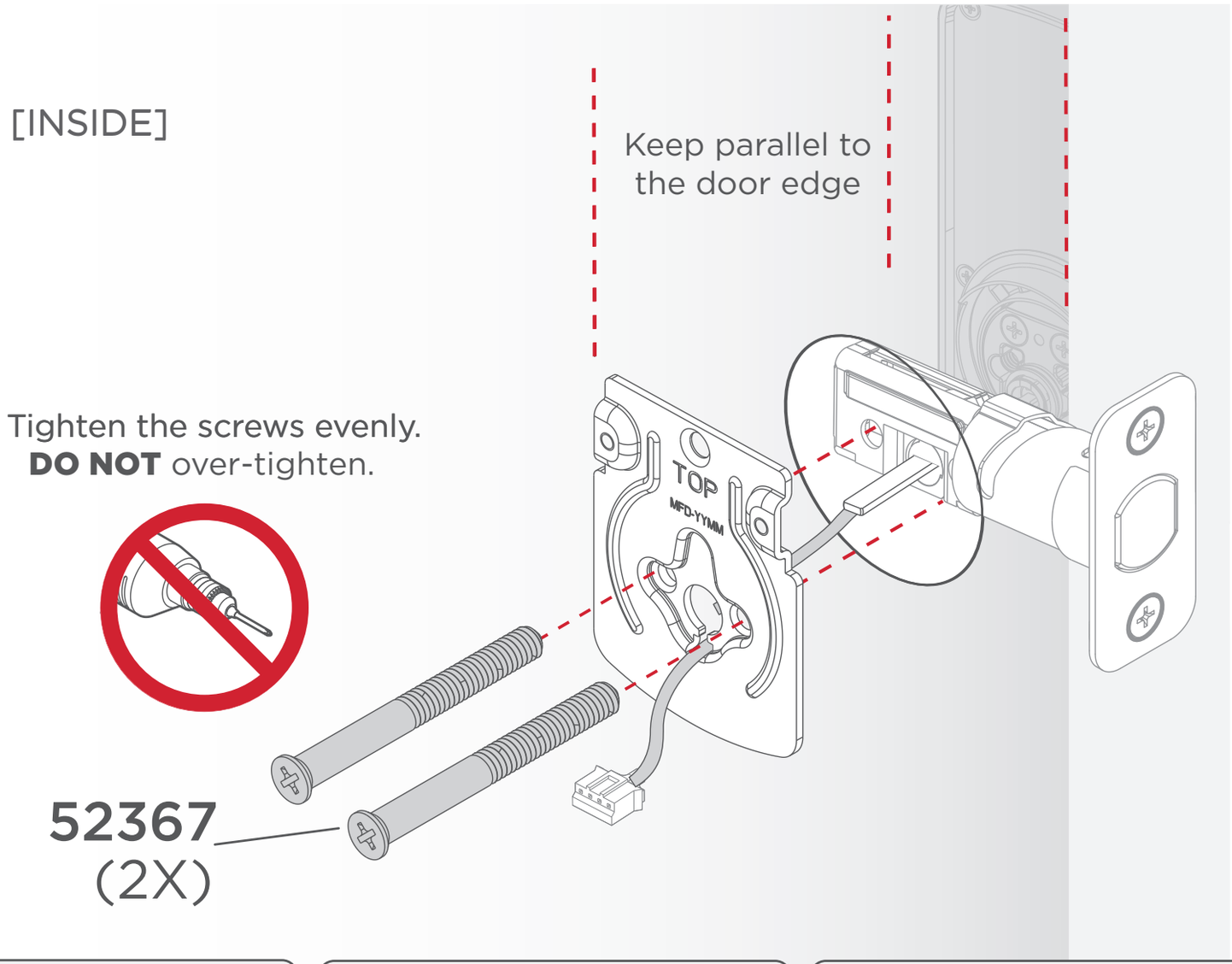

B Route the cable through the center hole of the mounting plate.

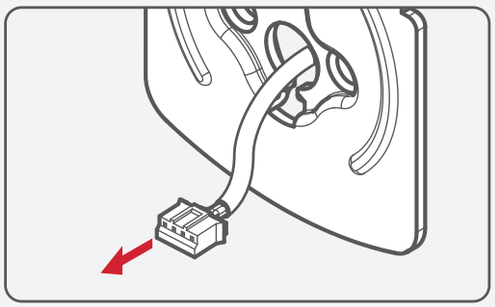

C Push the cable into the bottom hole of the mounting plate.

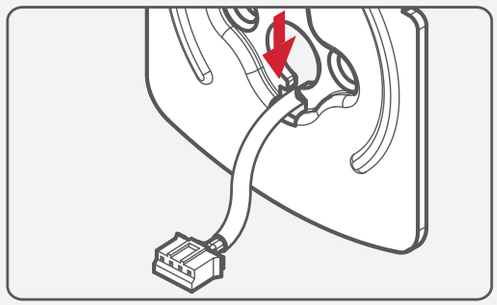

D Insert the key and test the latch. If the latch does not extend or retract smoothly, adjust the screws. Leave bolt **LOCKED/EXTENDED.**

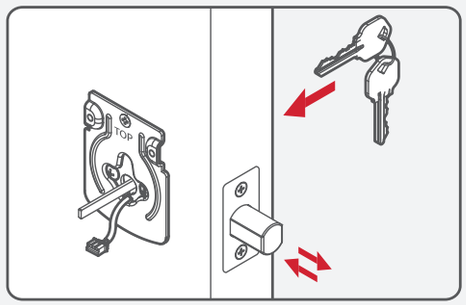

4 Install the interior assembly

Remove the interior cover from the interior assembly.

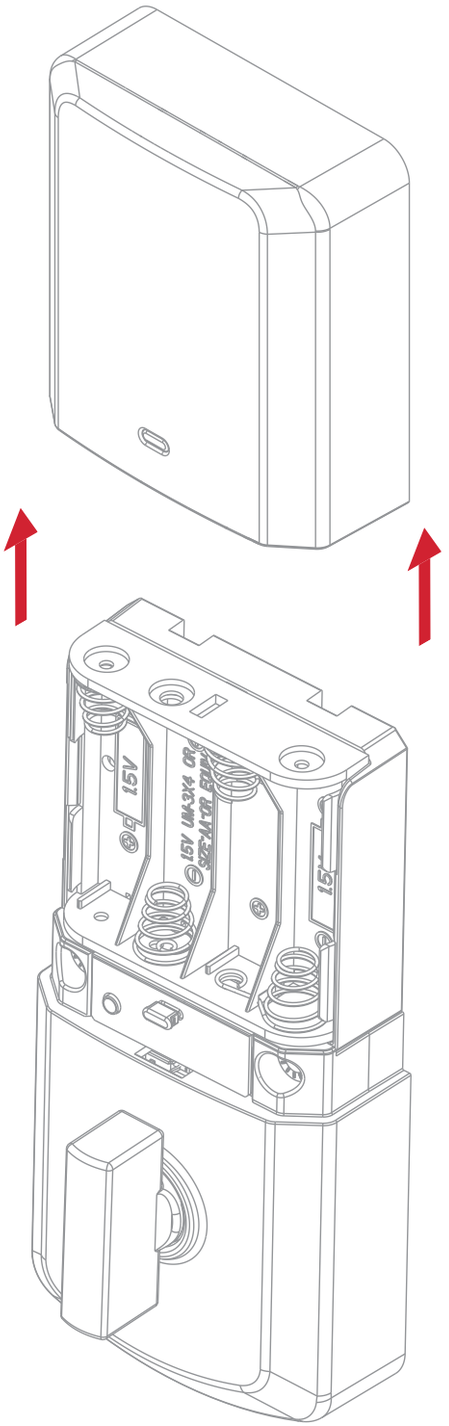

⚠ DO NOT install the batteries. Wait until Step 5.

A If the turnpiece is not pointing up, rotate the turnpiece until it's in a vertical position.

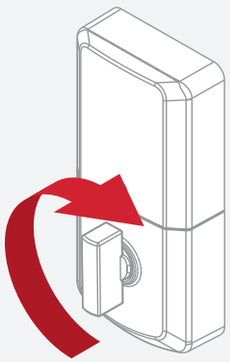

B Connect the cable. Ensure a tight cable connection.

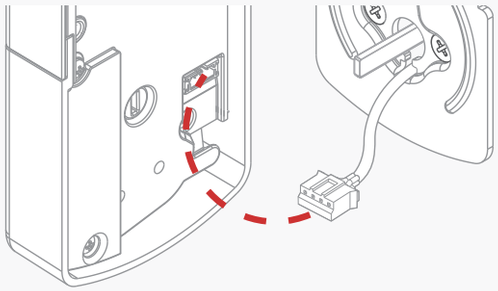

C Excess cable will sit inside the bottom of the interior housing.

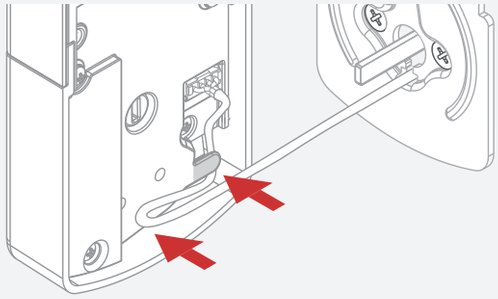

D Ensure the flat blade fully engages with the turnpiece shaft.

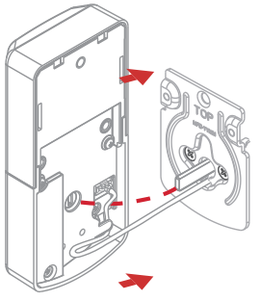

⚠ Ensure cable remains connected.

Secure the interior assembly onto the mounting plate.

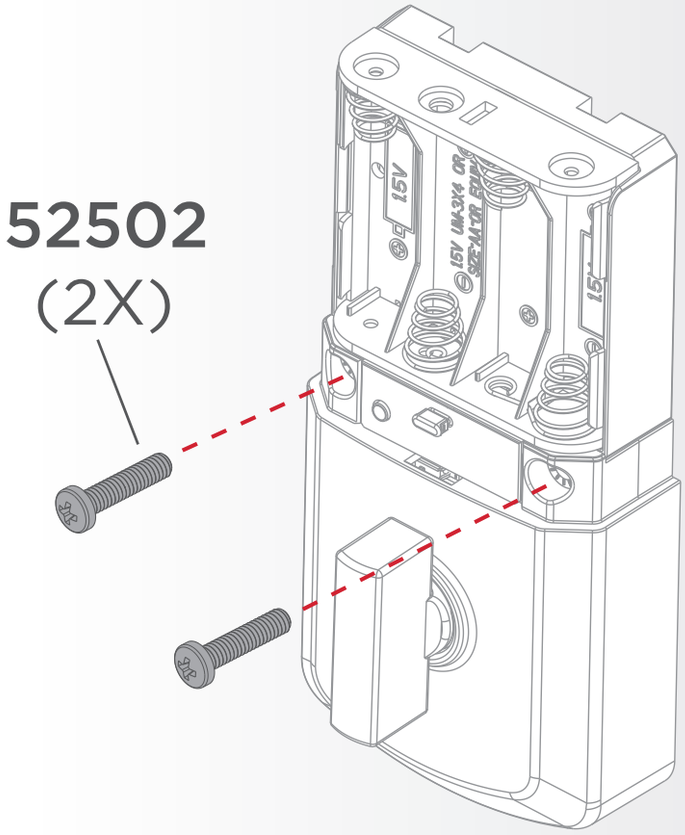

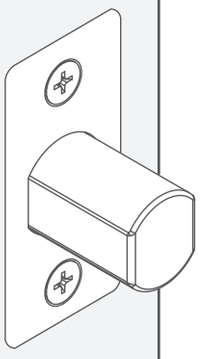

[INSIDE]

5 Install batteries

A Insert (4) AA batteries (included) into the battery pack.

⚠ Ensure correct polarity. Use new, non-rechargeable alkaline batteries only.

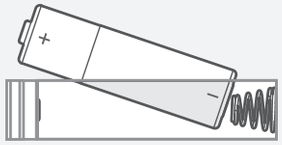

B Insert the (4) AA batteries.

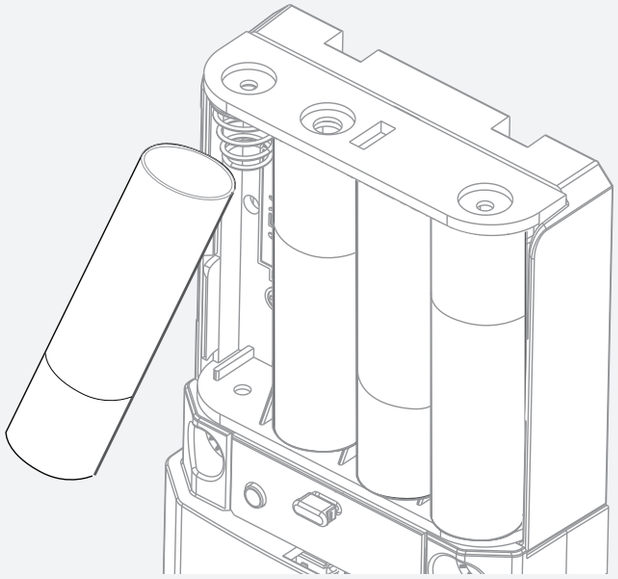

With the door open, install the batteries. **NOTE:** Lock must be installed on the door before inserting the batteries.

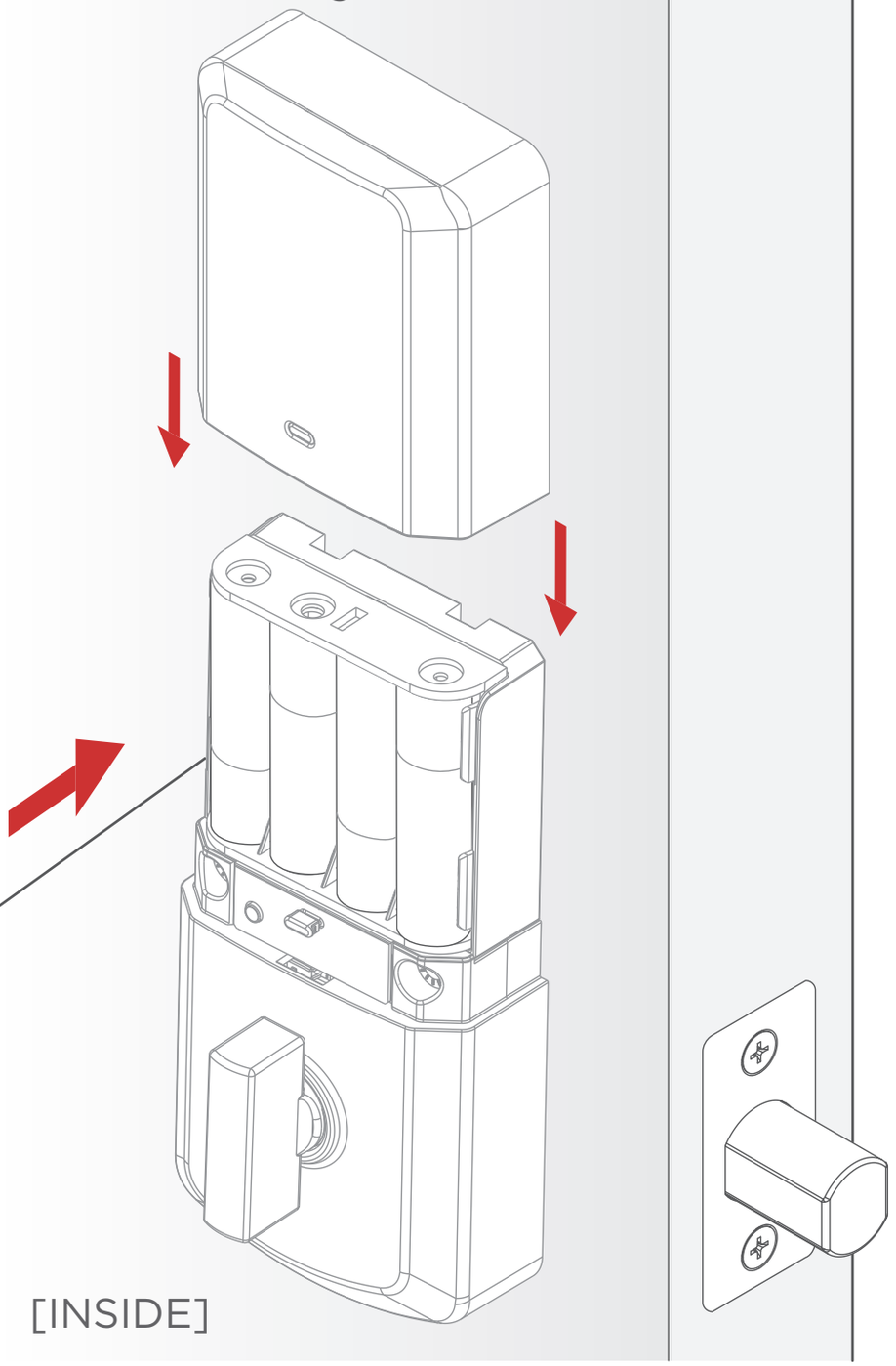

Download the Kwikset app & create an account to complete set up

Complete your lock set up

Full Setup in Kwikset app

Follow the instructions in the Kwikset app to complete lock setup.

kwikset.com/app

Download on the App Store

GET IT ON Google Play

⚠ If this lock was professionally installed (or installed by someone other than the homeowner), make sure this step is performed by the homeowner.

Direct Setup in Matter Smart Home Platform

See Matter Commissioning instructions on page 22.

Reference Guide

Locking

To lock your door, press the lock icon. The bolt will extend, then the screen will display the Locked LED Indicator and play the locked tone.

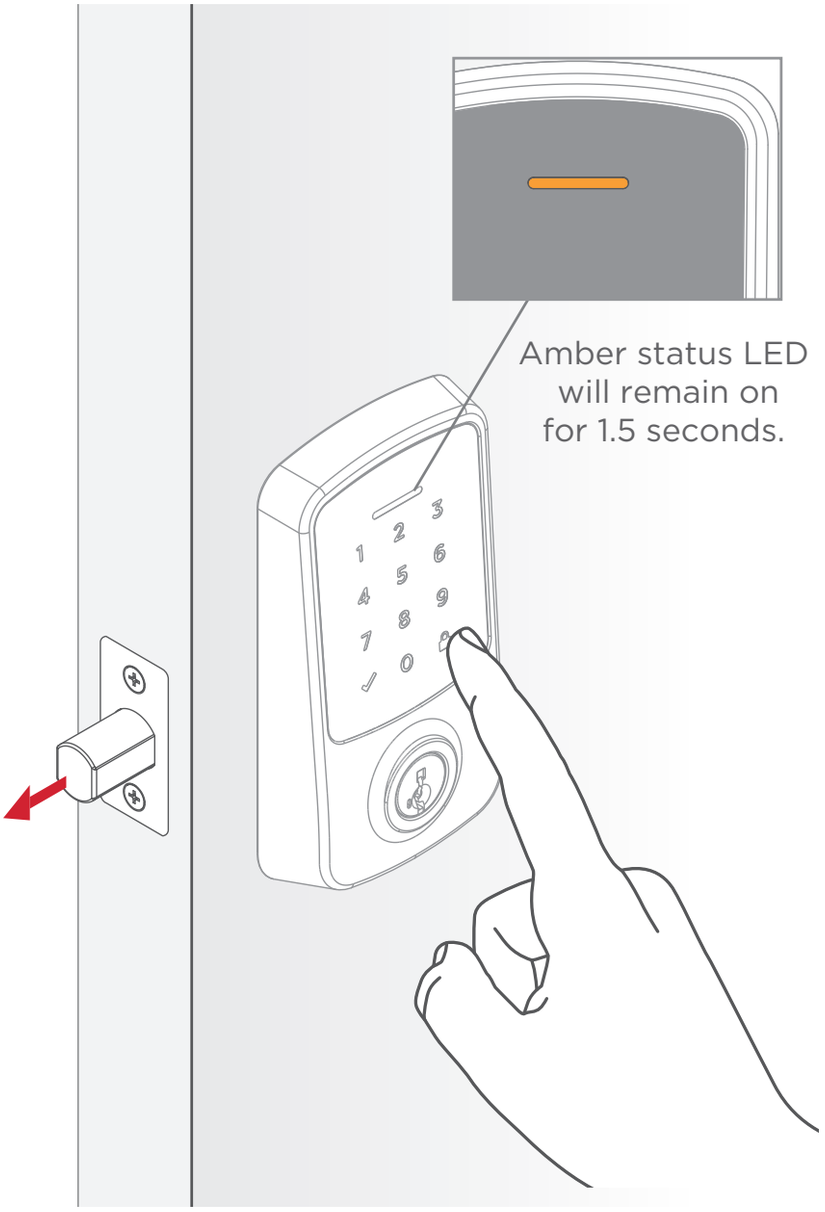

Unlocking

To unlock your door, enter your access code. The bolt will retract, then the screen will display the Unlocked LED Indicator and play the unlocked tone.

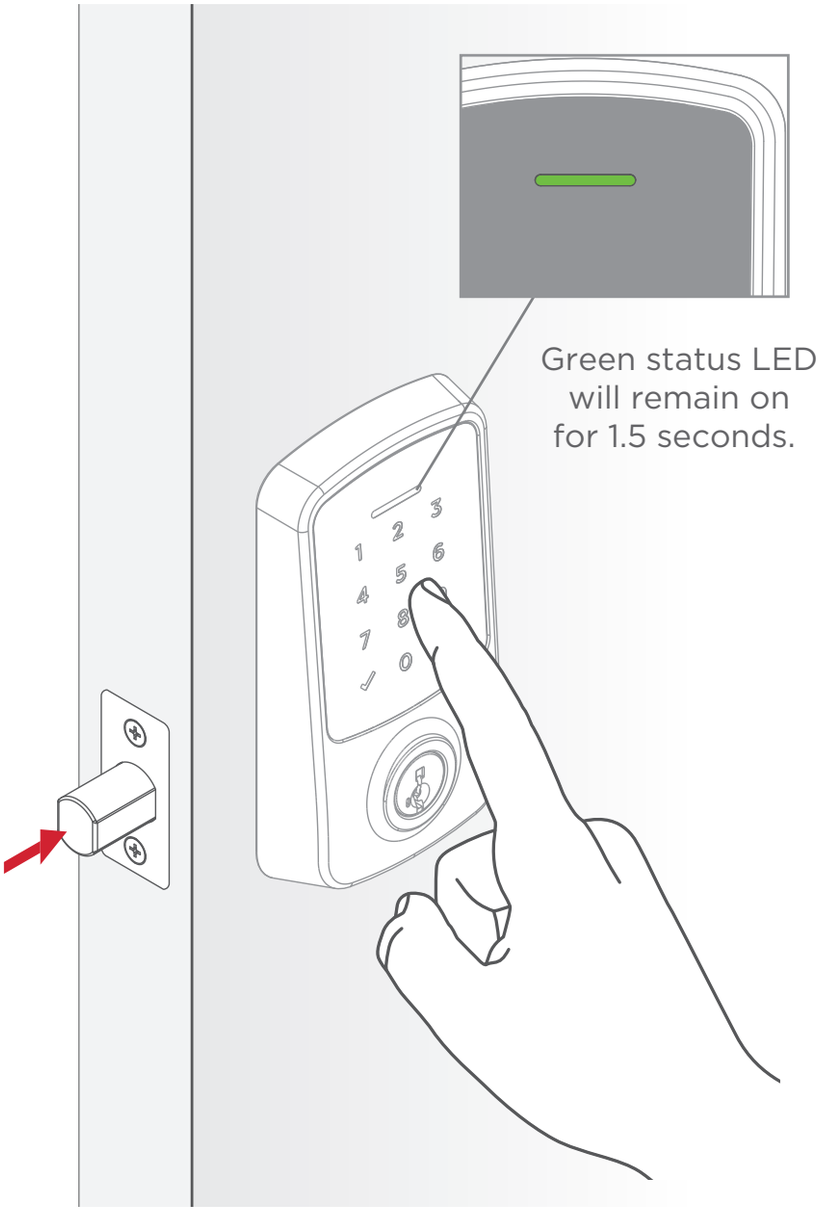

SmartKey® Re-key

Re-key the lock to work with your existing key by following the **SmartKey® Re-key instructions.**

NOTE: If Auto-Lock is enabled, remove the batteries before re-keying your lock.

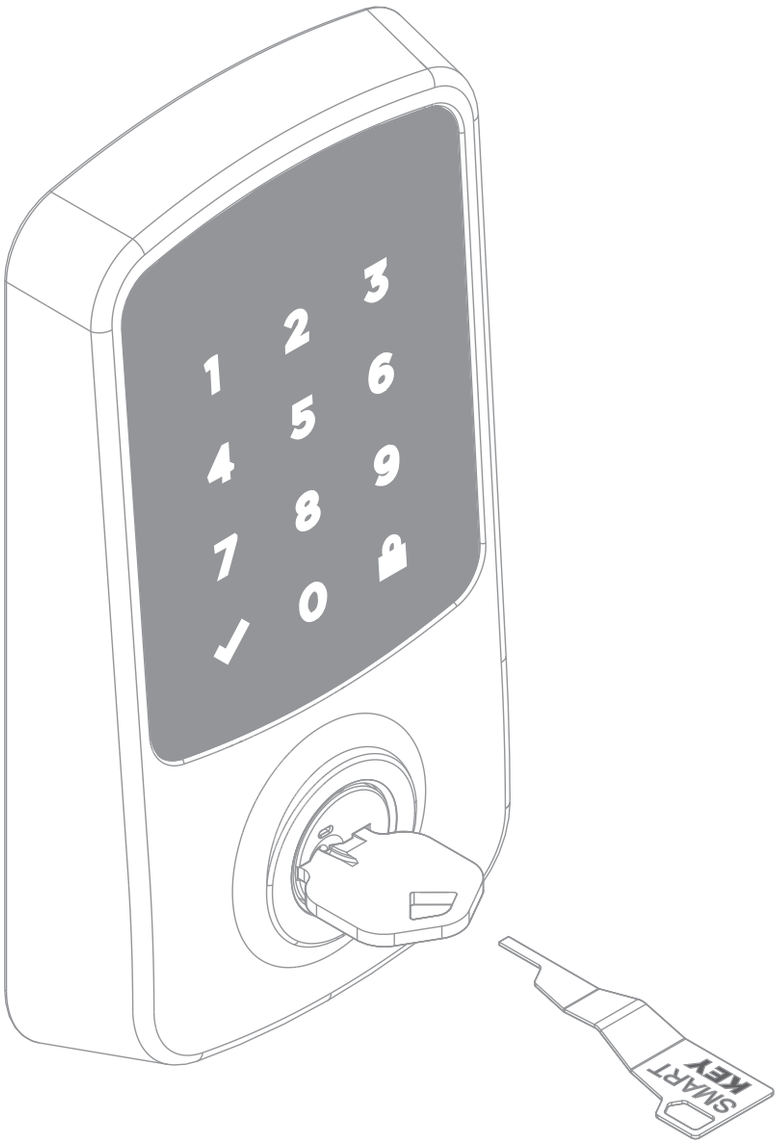

Exterior LED Indicators

Amber:
Locked

Green:
Unlocked

Red and Keypad flashes alternatively:
Lock Jammed

Flashes Red 2x:
Low Battery

Flashes Red once:
Invalid Credentials

Flashes Red 15x:
Lockout

Interior Status LED Indicators

Green

Slow Blinking:

Unlocked

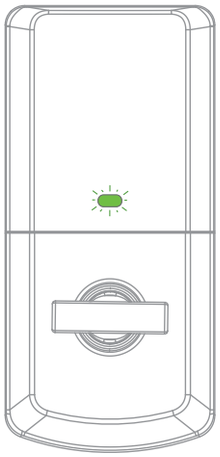

Amber

Slow Blinking:

Locked

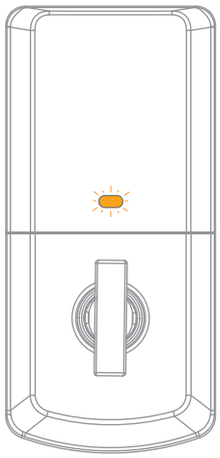

Red

Blinking:

Low Battery

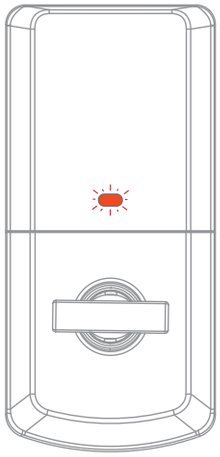

Matter Commissioning

1. Press and hold the Programming Button for 3 seconds.

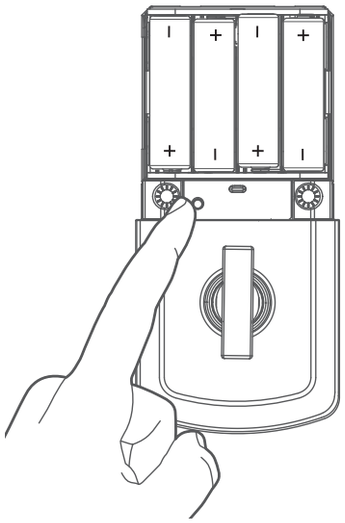

2. Interior Status LED will display CYAN and then beep.

3. Press “0” on the exterior keypad.

4. Interior Status LED will flash MAGENTA and play a tone if successful.

   If Matter Commissioning mode timeout after 15 minutes or failed, interior Status LED will flash RED and play a sound.

Factory Reset

Factory Reset will:

- delete all access codes and associated schedule
- reset lock settings to default
- lock will show as offline in the Kwikset App
- lock will be deactivated and will need to be set up as new

Factory Reset should be used when:

- you want to change the lock owner
- you have lost your phone
- you are troubleshooting the lock

1. Press and hold the Programming Button.

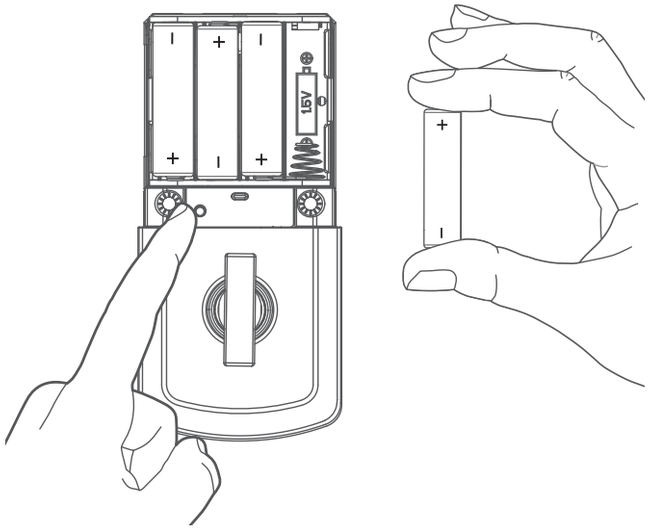

2. While still holding the Programming Button, insert the batteries. Continue holding the Programming Button for 30 seconds.

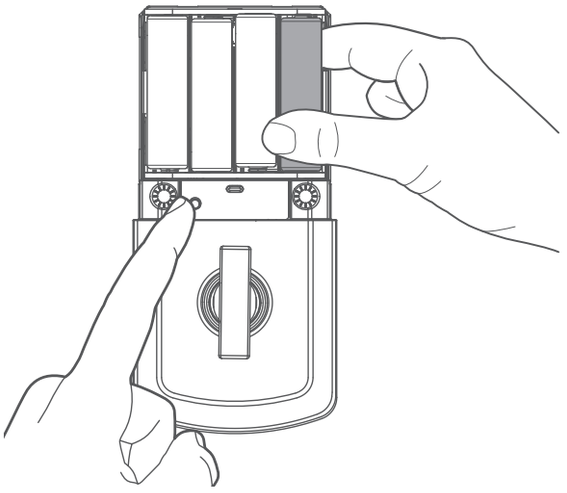

Continue to the next page for additional steps.

3. After 30 seconds, the Status LED light will flash RED and lock will beep. Release the Programming Button.

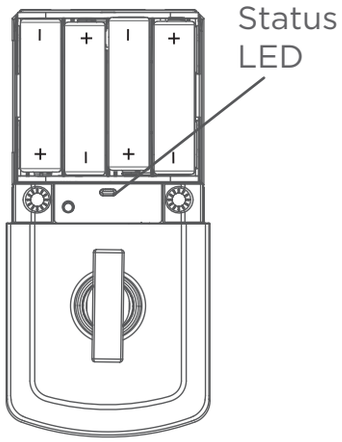

4. Press “1” on the exterior keypad. Press the Programming Button again within 5 seconds.

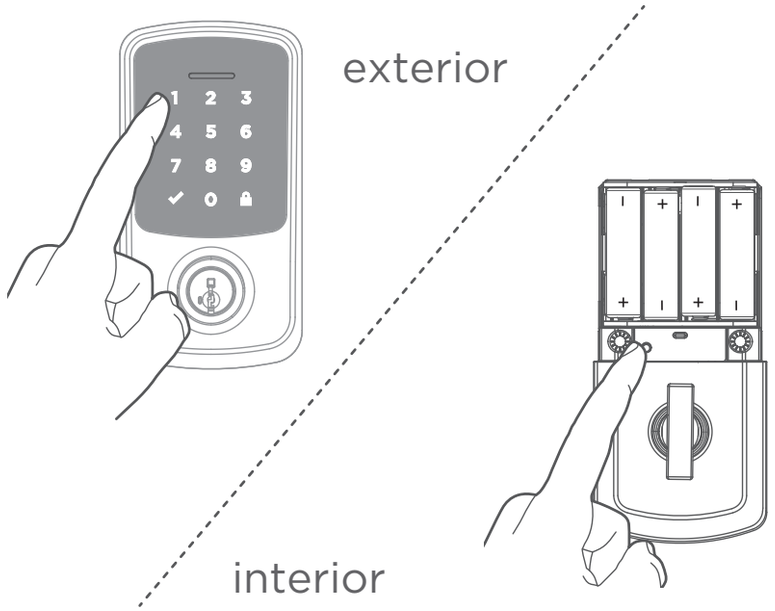

5. SUCCESS: Lock will play a series of beeps, Status LED will flash GREEN, then pulsing BLUE.

   UNSUCCESSFUL: Lock will play a single-tone sound, Status LED light will flash RED.

Aura Reach at a Glance

Exterior

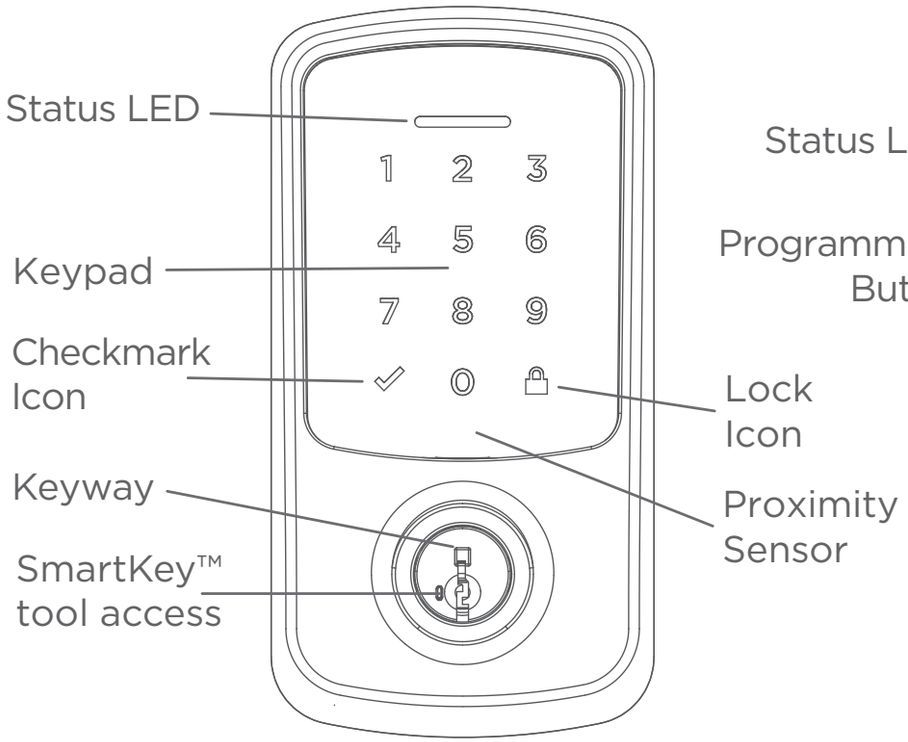

Interior
(cover removed)

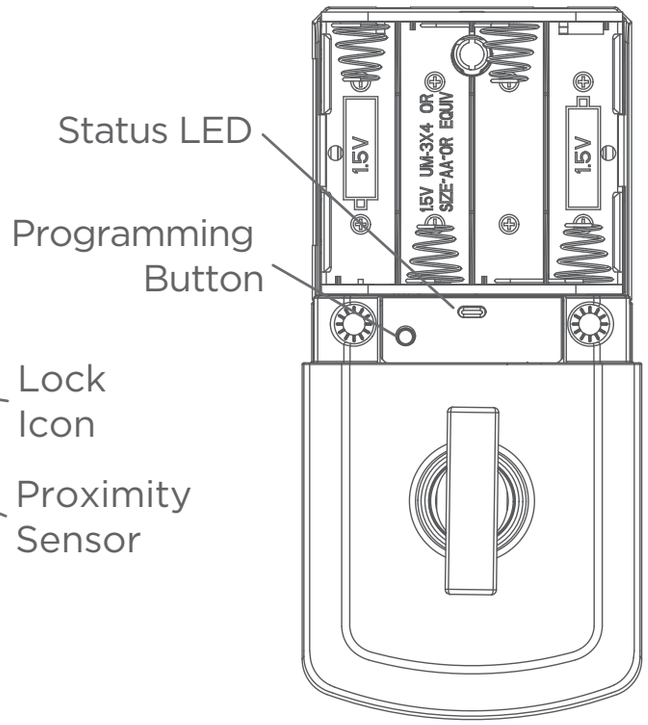

Troubleshooting

If you have any issues, please visit our support center: **kwikset.com/support** or call us at **1-800-327-5625.**

Important Safeguards

1. Read all instructions in their entirety.
2. Familiarize yourself with all warning and caution statements.
3. Remind all family members of safety precautions.
4. Always have access to your lock's standard key.
5. If using the Auto-Lock features, make sure you have your smartphone or standard key with you to prevent locking yourself out.
6. Familiarize yourself with all light bar error notifications.
7. Replace low batteries immediately.
8. Dispose of used batteries according to local laws and regulations.

⚠ **WARNING:** This Manufacturer advises that no lock can provide complete security by itself. This lock may be defeated by forcible or technical means, or evaded by entry elsewhere on the property. No lock can substitute for caution, awareness of your environment, and common sense. Builder's hardware is available in multiple performance grades to suit the application. In order to enhance security and reduce risk, you should consult a qualified locksmith or other security professional.

Regulatory Compliance

FCC ID: NUL-AURA2
IC: 3022A-AURA2

FCC Interference Statement
This product complies with standards established by the following regulatory bodies:
•Federal Communications Commission (FCC)
• Industry Canada

FCC
This device complies with Part 15 of the FCC Rules. Operation is subject to the following two conditions: (1) this device may not cause harmful interference, and (2) this device must accept any interference received, including interference that may cause undesired operation. This equipment has been tested and found to comply with the limits for a Class B digital device, pursuant to Part 15 of the FCC Rules. These limits are designed to provide reasonable protection against harmful interference in a residential installation. This equipment generates, uses, and can radiate radio frequency energy and, if not installed and used in accordance with the instructions, may cause harmful interference to radio communications. However, there is no guarantee that interference will not occur in a particular installation. If this equipment does cause harmful interference to radio or television reception, which can be determined by turning the equipment off and on, the user is encouraged to try to correct the interference by one or more of the following measures:
• Reorient or relocate the receiving antenna.
• Increase the separation between the equipment and receiver.
• Connect the equipment into an outlet on a circuit different from that to which the receiver is connected.
• Consult the dealer or an experienced radio/TV technician for help.
IMPORTANT! Changes or modifications not expressly approved by the manufacturer could void the user's authority to operate the equipment.

Industry Canada
This device contains license exempt transmitter(s)/receiver(s) that comply with Innovation, Science and Economic Development Canada's license-exempt RSS(s). Operation is subject to the following two conditions: (1) This device may not cause interference. (2) This device must accept any interference, including interference that may cause undesired operation of the device.
L'émetteur exempt de licence contenu dans le présent appareil est conforme aux CNR d'Innovation, Sciences et Développement économique Canada applicables aux appareils radio exempts de licence. L'exploitation est autorisée aux deux conditions suivantes: (1) L'appareil ne doit pas produire de brouillage;(2) L'appareil doit accepter tout brouillage radioélectrique subi, même si le brouillage est susceptible d'en compromettre le fonctionnement.

RF Exposure
This equipment complies with FCC radiation exposure limits set forth for an uncontrolled environment. This equipment should be installed and operated with a minimum distance of 20 cm between the radiator and a human body.
This equipment complies with ISED radiation exposure limits set forth for an uncontrolled environment. This equipment should be installed and operated with a minimum distance of 20 cm between the radiator and a human body.
Cet équipement est conforme aux limites d'exposition aux rayonnements ISED établies pour un environnement non contrôlé. Cet équipement doit être installé et utilisé avec une distance minimale de 20 cm entre le radiateur et un corps humain.