Incandescent Linear Pendant

LP57642
INSTALLATION SHEET

START FROM HERE

- Make sure **POWER** is **COMPLETELY OFF** at the fuse box
- Have your fixture installed by a qualified licensed electrician
- Prepare everything in a clear area
- Wear gloves at all time during this installation
- Read instructions carefully before you start assembly
- Keep this installation sheet for future reference

Technical Support: 1-855-855-8926

Please Note:

- 120V input

1. Remove fixture from its original package

2. Separate mounting plate **(1c)** from canopy **(2a)** by removing canopy screws **(2b)**

3. Attach mounting plate **(1c)** to electrical junction box **(1a)** using junction box screws provided **(1e)** in hardware package

4. Secure mounting plate **(1c)** to mounting surface with screws **(1g)** and anchors **(1f)**

5. Attach connector **(5a)** to fixture body to secure

6. To change fixture height, shorten or lengthen wire by removing screw **(2c)** from canopy **(2a)** and push or pull wire to your desired length. Secure screw **(2c)** in canopy **(2a)** to lock wire in place

7. Make proper electrical connections (**black** to **hot** "L", **white** to **neutral** "N", **ground** to **"GND")** with wire nuts **(1b)** provided in hardware package

8. Attach shade **(3b)** to fixture **(3a)**, and secure with shade connector **(3c)** by threading clockwise

9. Attach canopy **(2a)** to mounting plate **(1c)** with canopy screws **(2b)**

10. Insert bulb **(4a)** into fixture socket

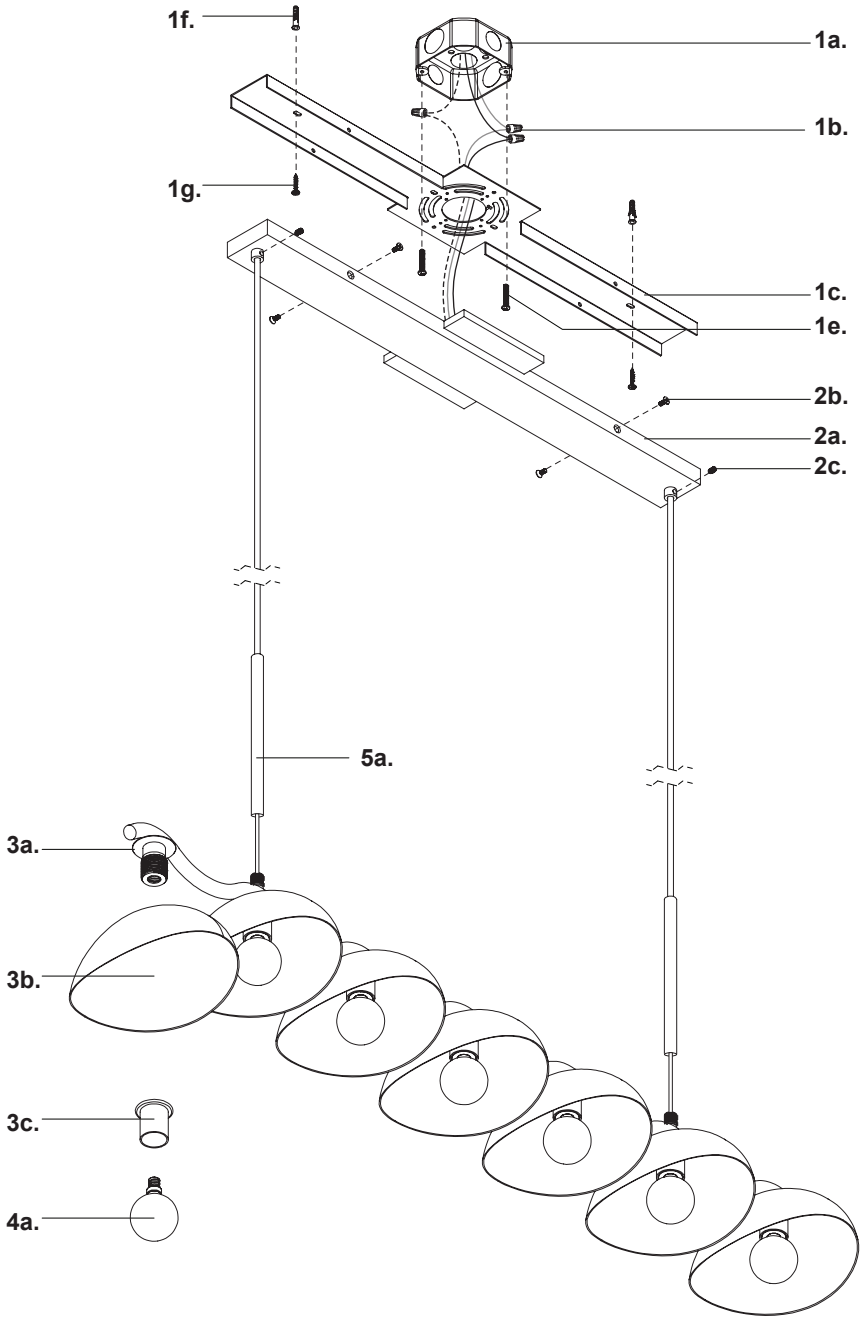

KUZCO
19054 28th Avenue Surrey, BC Canada V3Z 6M3
T: 604 538 7162 TF: 1-855 85 KUZCO F: 604 538 7196
W: kuzcolighting.com
20250107