LED Vanity

VL16720
INSTALLATION SHEET

START FROM HERE

- Make sure power is completely off at the fuse box.
- Have your fixture installed by a qualified licensed electrician
- Prepare everything in a clear area.
- Wear gloves at all times during this installation.
- Read instructions carefully before you start assembly.
- Keep this instruction sheet for future reference.

Technical Support: 1-855-855-8926

Please Note:
- For dimming, a TRIAC type of dimmer is required.

1. Remove the fixture from its original packaging. Remove the mounting plate **(1c)** from the canopy **(2a)** by removing the two screws **(2b)**. Attach the mounting plate **(1c)** to the electrical junction box **(1a)** using the two screws **(1d)** provided in the hardware package.

2. Connect all wiring with the provided marrettes **(1b)** (white to white “N”, black to black “L”, ground to ground “G”). Attach the canopy **(2a)** to the mounting plate **(1c)** and secure with two screws **(2b).**

3. You have now completed the installation of your fixture, do enjoy.

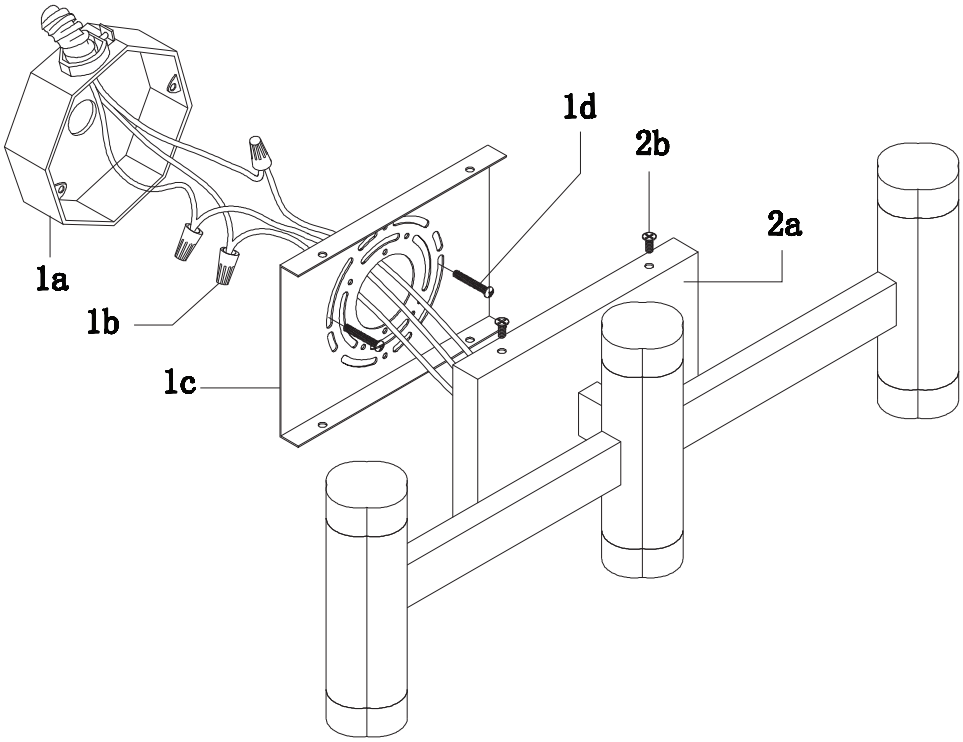

KUZCO
19054 28th Avenue Surrey, BC Canada V3S 6M3
T: 604 538 7162 TF: 1-855 85 KUZCO F: 604 538 7196
W: kuzcolighting.com
20181206