KOHLER®

Roughing-In

K-560
BELLERA™
PULL-DOWN KITCHEN SINK FAUCET

Product Information

Applicable product:	
Pull-down kitchen sink faucet	K-560
Lever handle is ADA compliant.	

Optional accessories:	
Deep roughing-in kit – provides an additional 2″ (5.1 cm) assembly depth	1012715
Low flow kit – reduces maximum flow to 1.5 gpm (5.7 L) at 60 psi (4.1 bar)	1167289
High flow kit – increases maximum flow to 2.2 gpm (8.3 L) at 60 psi (4.1 bar)	1167290

Installation Notes

Install this product according to the installation guide.
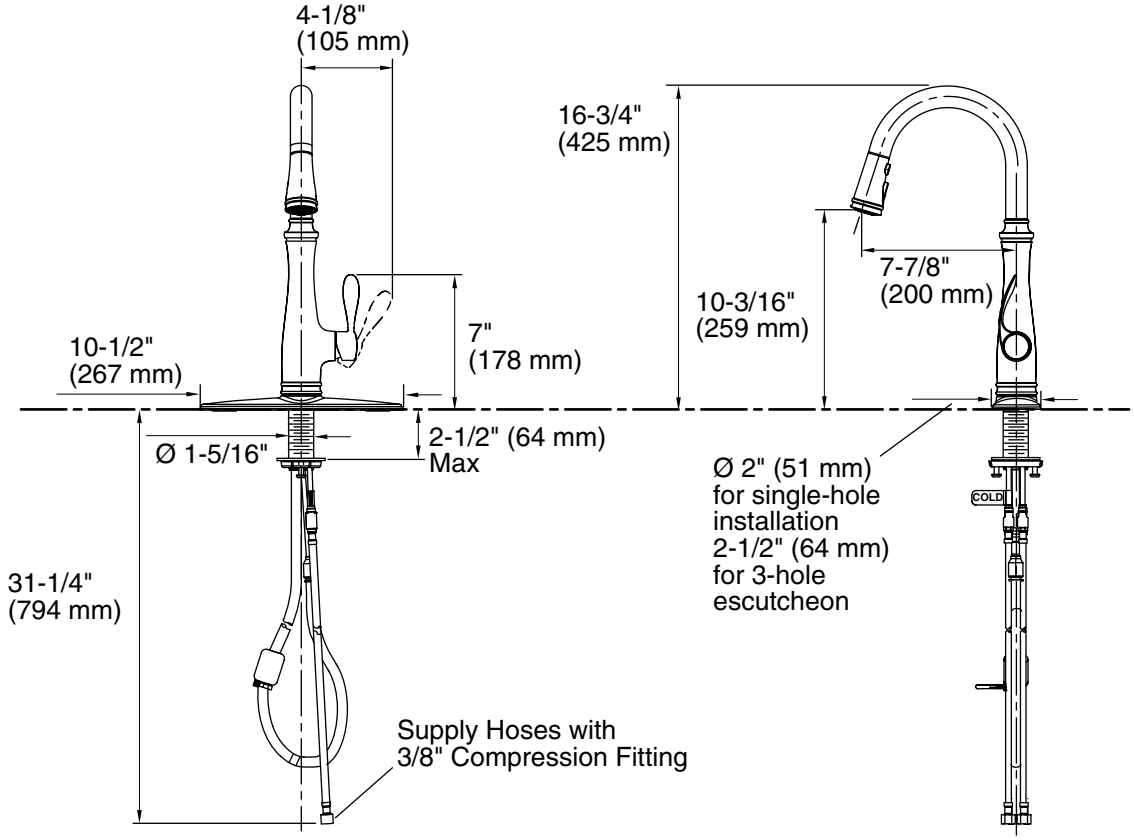
ADA compliant when installed to the specific requirements of the regulation.