KOHLER®

Roughing-In

K-3940
KATHRYN®
COMFORT HEIGHT® TOILET

Product Information

Applicable product:	
Comfort Height toilet	K-3940

Fixture:	
Configuration	One-piece, elongated
Water per flush	1.28 gpf (4.8 lpf)
Passageway	2-1/8″ (54 mm)
Water area	10-1/2″ (267 mm) x 7-1/2″ (191 mm)
Water depth from rim	5-5/8″ (143 mm)
Seat post hole centers	5-1/2″ (140 mm)

Included components:	
Closed front seat with cover	K-4733
Tank cover	1006066
Trip lever	K-9131
Tank accessory pack	52265
Bolt cap accessory pack	1013092

Installation Notes

Install this product according to the installation guide.

Will comply with the Americans with Disabilities Act **(ADA)** when installed per the requirements of the 2010 ADA Standards for Accessible Design, Section 604 Water Closets, of the Act. The Model Plumbing Codes require the installation of elongated open-front toilet seats in public bathrooms.

Will comply with **CSA B651** when installed per Clause 4.3.6 of the standard.

Will comply with **OBC** Barrier Free requirements when installed per Clause 3.8.3.8 and 3.8.3.9.
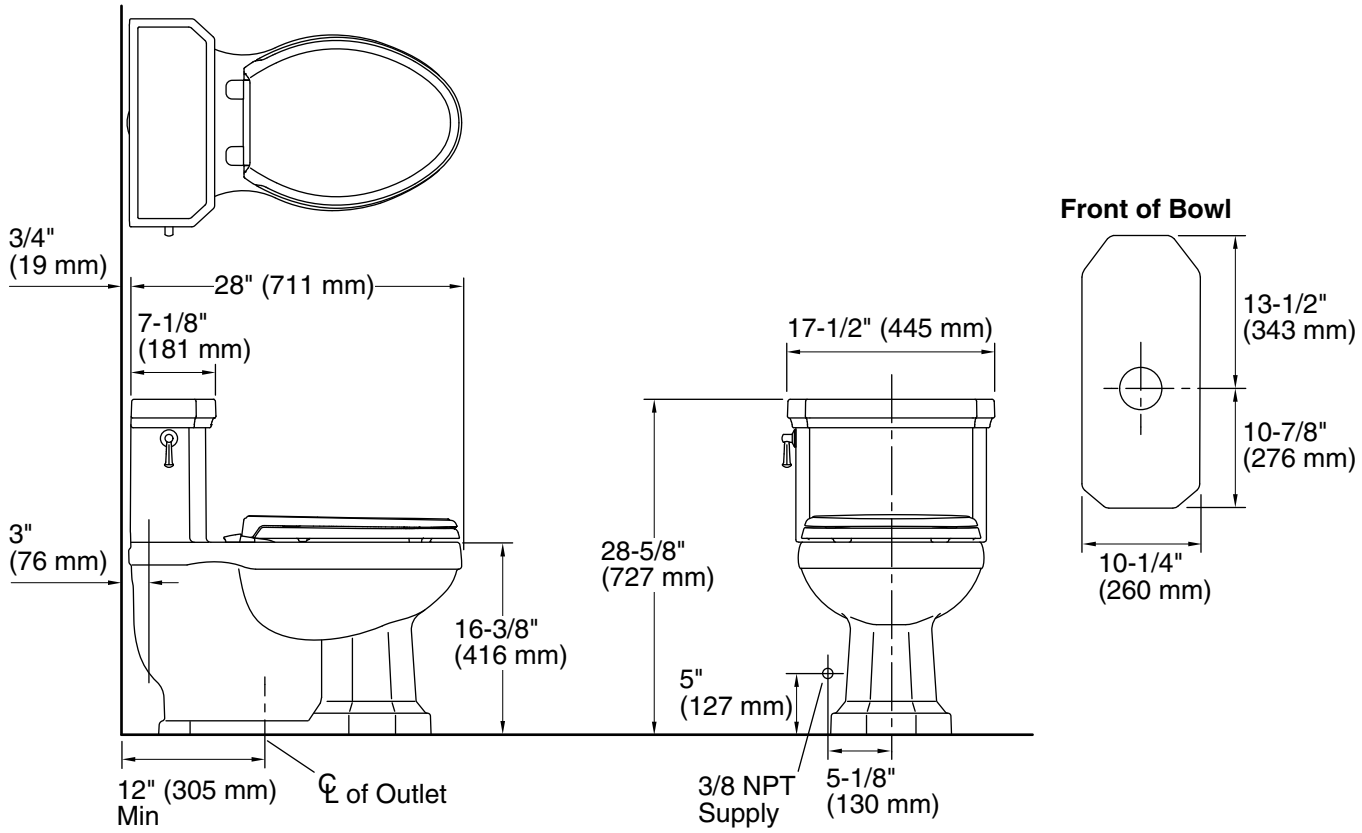
Fixture conforms to ASME Standard A112.19.2/CSA B45.1. All dimensions are nominal.