KOHLER®

# Roughing-In

**K-14173, K-14270**
**CANTATA®**
**COUNTERTOP LAVATORY**

## Product Information

| Applicable products: | |
|---|---|
| Cantata® countertop lavatory | K-14173 |
| Cantata® countertop lavatory | K-14270 |

| Fixture*: | |
|---|---|
| Basin area | 22″ (55.9 cm) x 14″ (35.6 cm) |
| Water depth | 5-3/8″ (13.7 cm) |
| Drain hole | 1-3/4″ (4.4 cm) D. |
| * Approximate measurements for comparison only. | |

| Included components: | |
|---|---|
| Adjustable linkage | 40372 |
| Cut-out template | 111539-7 |

## Installation Notes

Install this product according to the installation guide.

**NOTICE:** Countertop manufacturer or cutter **must** use the cut-out template provided with the product, or a current one provided by Kohler Co. (call 1-800-4-KOHLER). Kohler Co. is not responsible for cutout errors when the incorrect cut-out template is used.

Will comply with **ADA** when installer per section 606 Lavatories of the Act.

Will comply with **CSA B651** when installed per Clause 4.3.3 of the standard.

Will comply with **OBC** when installed per Clause 3.8.3.11.

Fixture conforms to ASME Standard A112.19.2/CSA B45.1. All dimensions are nominal.

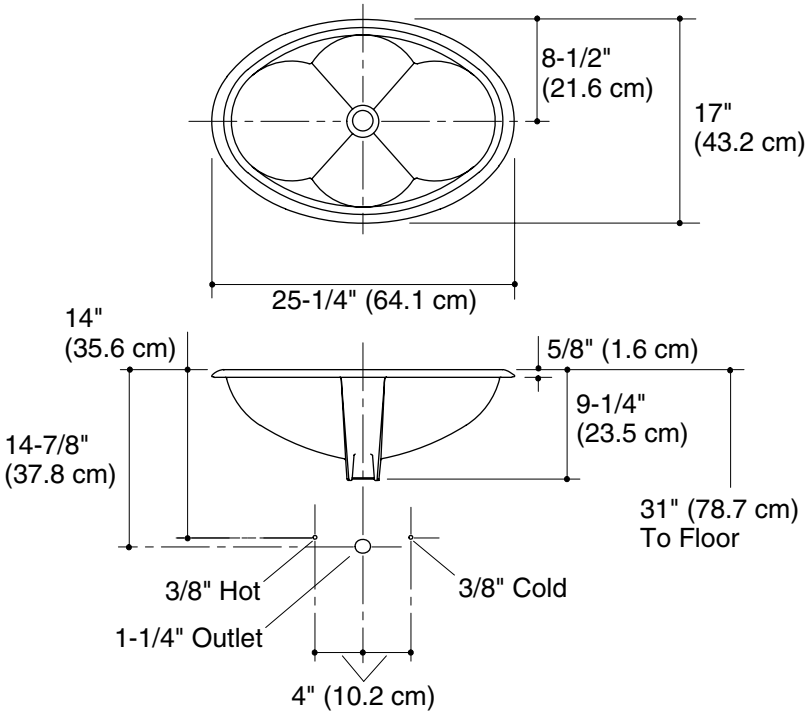


**Standard Installation**

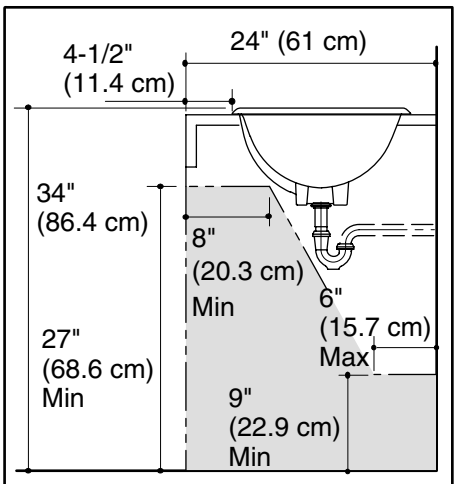


**Recommended ADA Installation**