KOHLER. Faucets

Triton® Bowe™

Centerset Bathroom Sink Faucet

K-400T70-4ANL

Features

- Brass construction.
- Brass valve bodies.
- Quarter-turn washerless ceramic disc valves.
- 5-3/16" (132 mm) spout reach.
- Vandal resistant laminar outlet for laminar flow
- Lever handle.
- Less drain.
- 0.5 gal/min (1.9 l/min) maximum flow rate [max at 60 psi (4.14 bar)].

Codes/Standards

ASME A112.18.1/CSA B125.1
NSF 61
NSF 372
All applicable US Federal and State material regulations
DOE - Energy Policy Act 1992
California Energy Commission (CEC)

KOHLER® One-Year Limited Warranty

See website for detailed warranty information.

Available Color/Finishes

Color tiles intended for reference only.

Color	Code	Description
	CP	Polished Chrome

KOHLER. Faucets

Triton® Bowe™

Centerset Bathroom Sink Faucet

K-400T70-4ANL

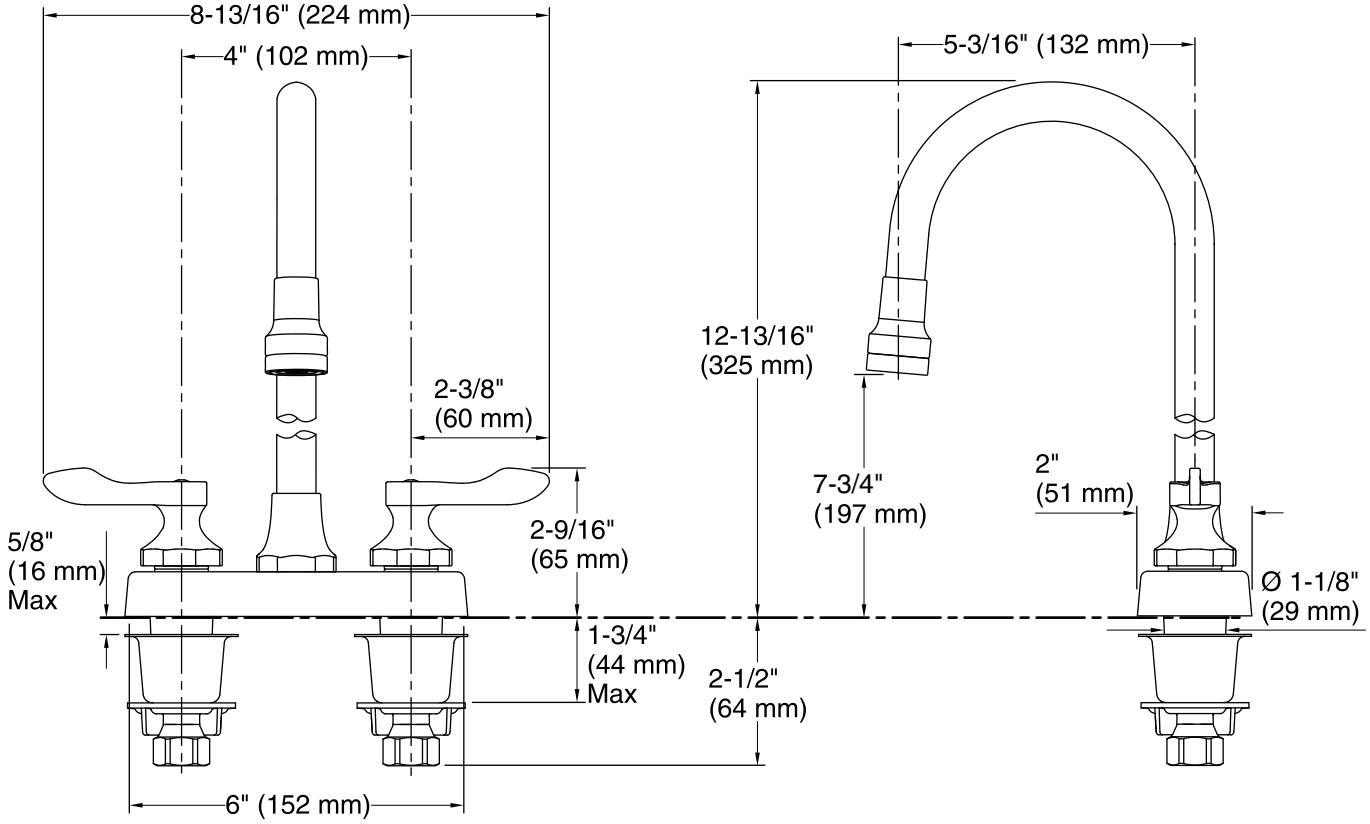

Technical Information

All product dimensions are nominal.

Spout:

Spout reach:	5-3/16" (132 mm)
Handle clearance:	2-3/8" (61 mm)

Faucet:

Flow rate:	0.5 gal/min (1.9 l/min)
Pressure:	60 psi (4.1 bar)

Notes

Install this product according to the installation guide.