Underscore® Oval

5.5' BubbleMassage™ Bath

K-5716-GW

Features

- Bask® heated surface creates spa-like relaxation with soothing warmth on your back, shoulders, and neck.
- Three heat settings allow you to customize the surface temperature.
- 122 airjets release thousands of bubbles that surround, support, and massage the body.
- Variable-speed blower lets you adjust massage intensity to 18 levels.
- Zones of Control™ feature allows you to target airjet massage to back, midsection, or feet.
- Lighted keypad.
- Molded lumbar support offers extra comfort while bathing.
- Oval-shaped basin offers a graceful and spacious bathing experience.
- Slotted overflow allows for deep soaking.
- Immediate and manual purge cycles remove residual water from air channels after use.
- Requires K-7271 or K-7272 Clearflo slotted overflow bath drain (sold separately).
- Center drain.

Material

- Acrylic

Hydrotherapy

- BubbleMassage

Installation

- Drop-in or under-mount.

Required Accessories

K-7271 Brass Slotted Overflow Bath Drain

or

K-7272 PVC Slotted Overflow Bath Drain

Recommended Accessories

K-24916 Wireless Music Kit
K-883 Under-Mount Installation Kit

Codes/Standards

ASME A112.19.7/CSA B45.10
CSA B45.5/IAPMO Z124
ASTM E162
ASTM E662
UL 1795
Greenguard UL 2818 - Gold

KOHLER® Plastic Baths and Receptors Lifetime Limited Warranty
KOHLER® Hydrotherapy Components Five-Year Limited Warranty

See website for detailed warranty information.

Available Color/Finishes

Color tiles intended for reference only.

Color	Code	Description
	0	White
	96	Biscuit
	47	Almond
	NY	Dune
	95	Ice™ Grey
	G9	Sandbar
	K4	Cashmere
	58	Thunder™ Grey
	7	Black Black™

Underscore® Oval

5.5' BubbleMassage™ Bath

K-5716-GW

No change in measurements if connected with drain illustrated. (K-7272)

Recommended Faucet Location

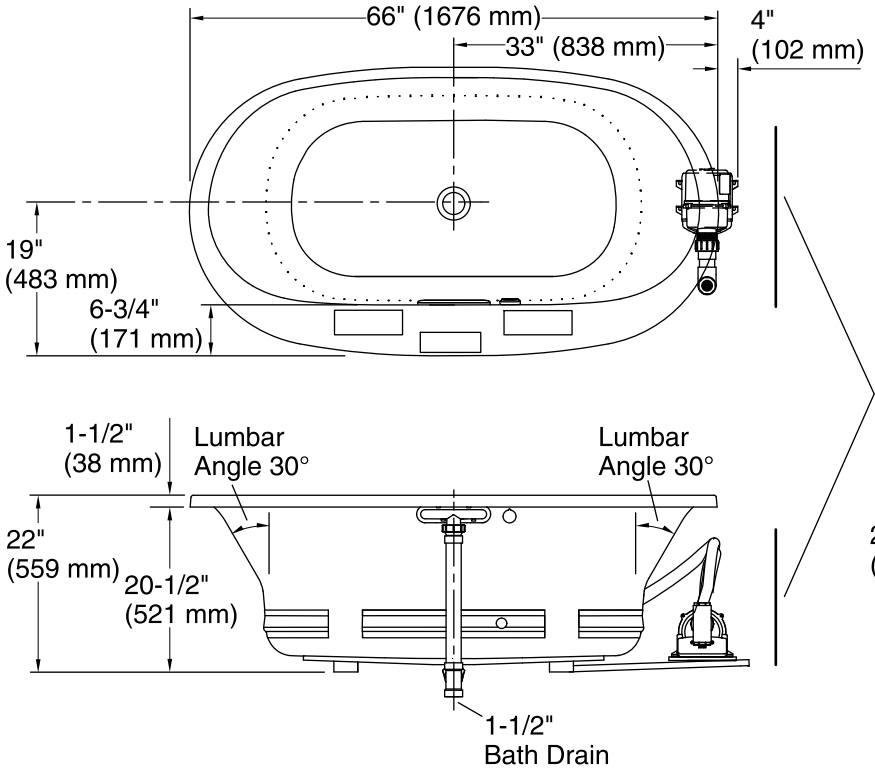

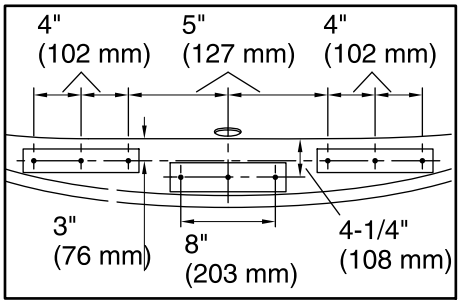

Recommended Faucet Hole Location

Blower/Control Access
34" (864 mm) W
x 15" (381 mm) H

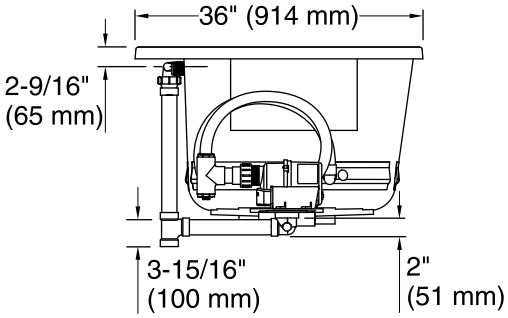

Required Electrical Service

One dedicated circuit required, protected with Class A Ground-Fault Circuit-Interrupter (GFCI) or Residual Current Device (RCD).

Blower, Heated Surface:	240 V, 15 A, 50/60 Hz

Technical Information

All product dimensions are nominal.

Installation:	Drop-in, Under-mount
Drain location:	Center
Basin area, bottom:	47" x 26-1/4" (1193 mm x 666 mm)
Basin area, top:	61-3/16" x 28-3/8" (1554 mm x 721 mm)
Weight:	90 lbs (40.8 kg)
Minimum floor load:	84.9 lbs/ft² (414.5 kg/m²)
Water depth:	17-9/16" (446 mm)
Water capacity:	85.5 gal (323.7 L)
Template:	Drop-in, 1268439-7, required, included
Electrical component rating:	Blower: 240 V, 5 A, 50/60 Hz Heated Surface: 120 V, 1.1 A, 60 Hz, 65 W
Blower speed:	Variable

Notes

Measure your actual product for rough-in details.

Install this product according to the installation instructions.

The hot water supply should be 70% of the capacity of the bath or greater. Installations will vary.

The blower base extends beyond the edge of the rim. Modify the framing as needed.

If installing a rim-mount faucet, make sure there is no interference above or below the deck before drilling any holes.

THE BOLD LOOK OF KOHLER