KS8921,6,8DX
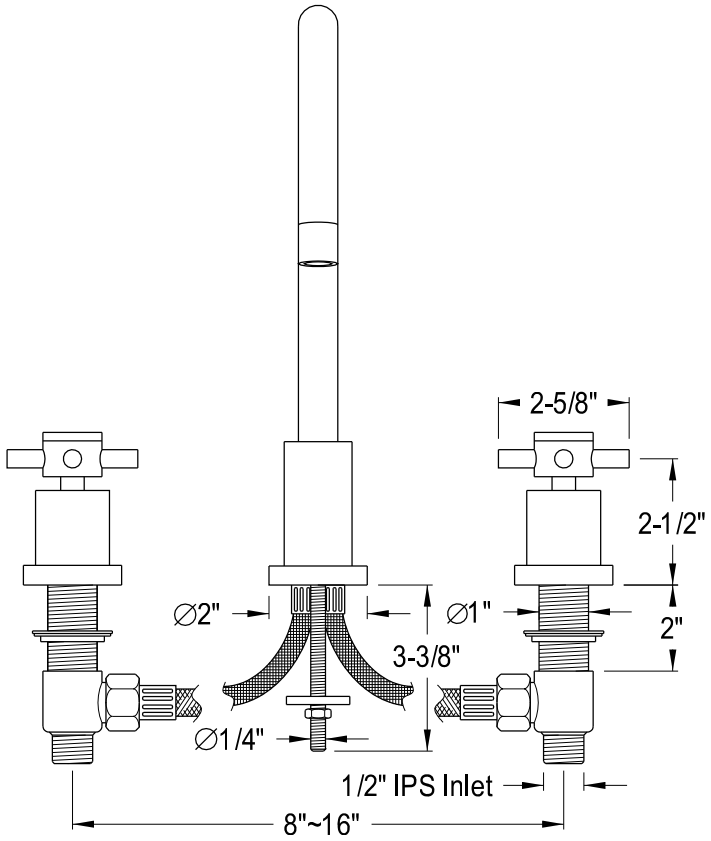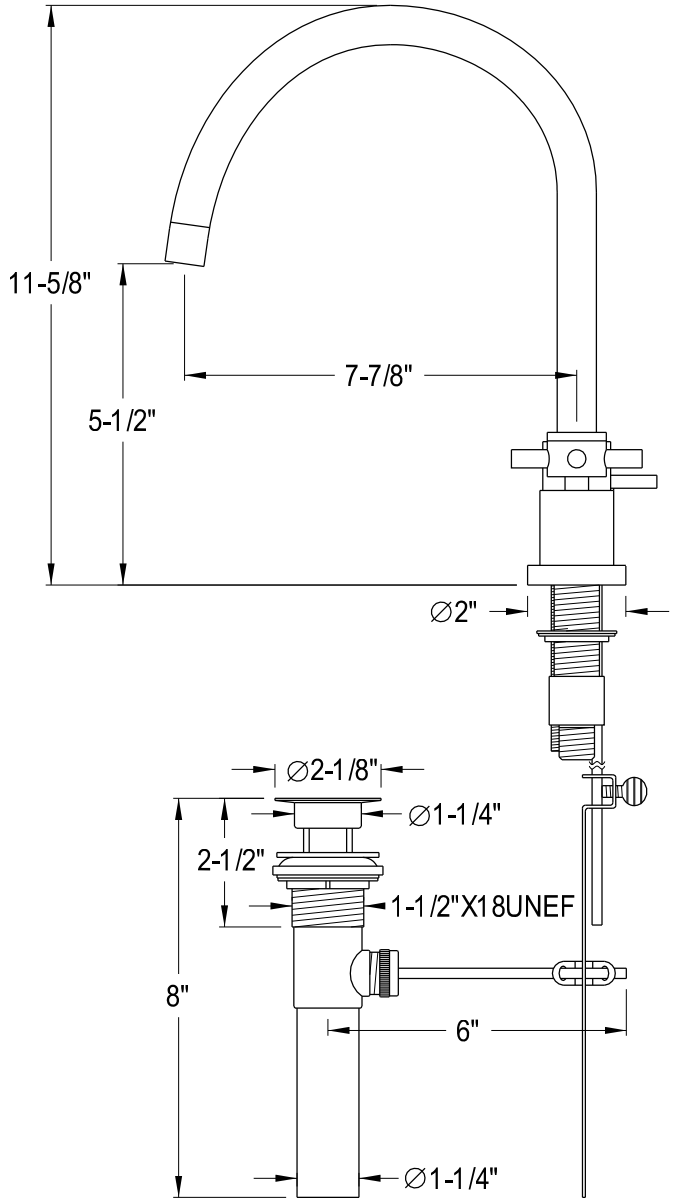
Widespread Lavatory Faucet With Brass Pop-Up