KS3911,2,5,8PL
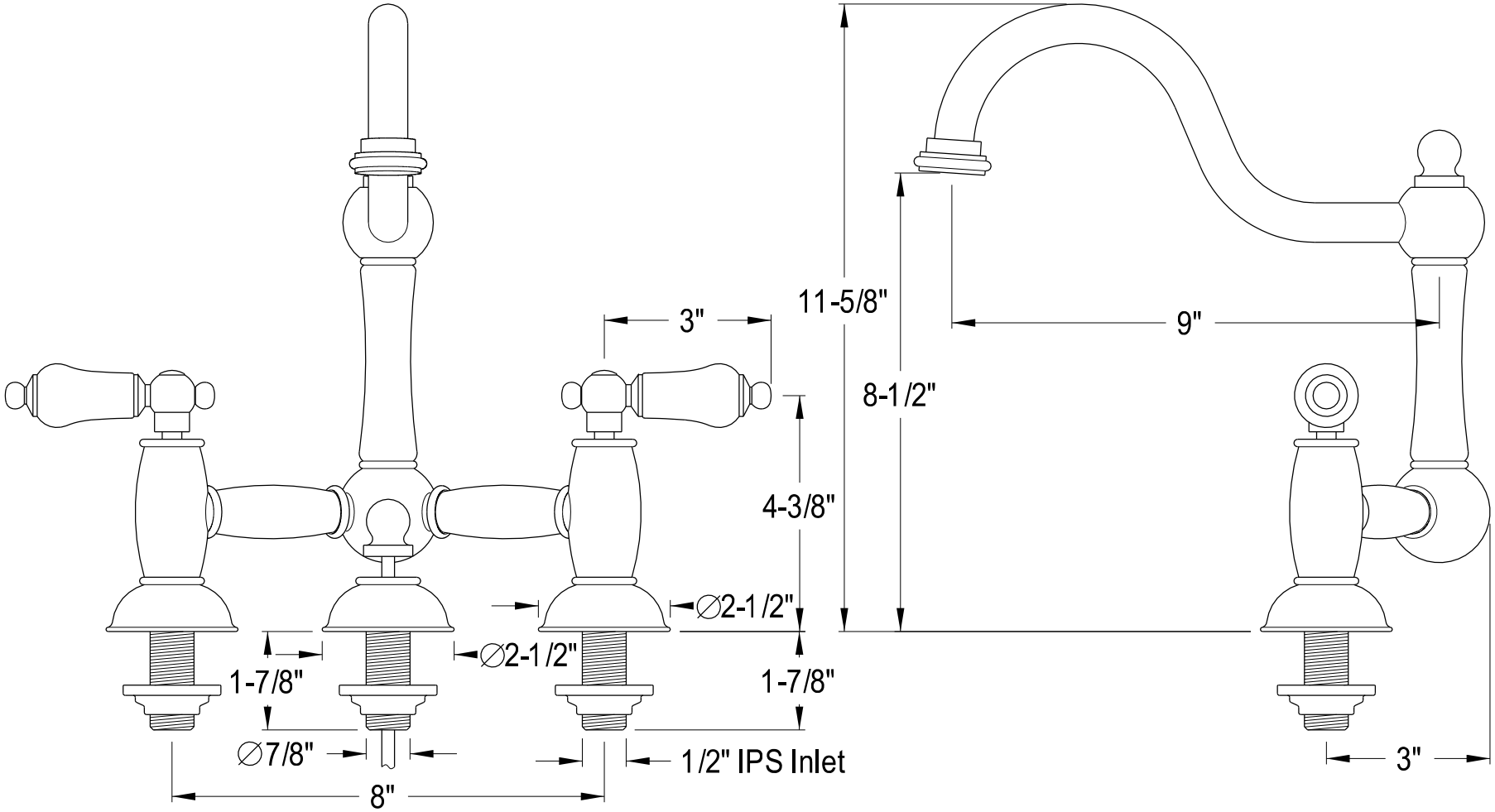
Vintage Lavatory Faucet