KS3121,2,5,8AL
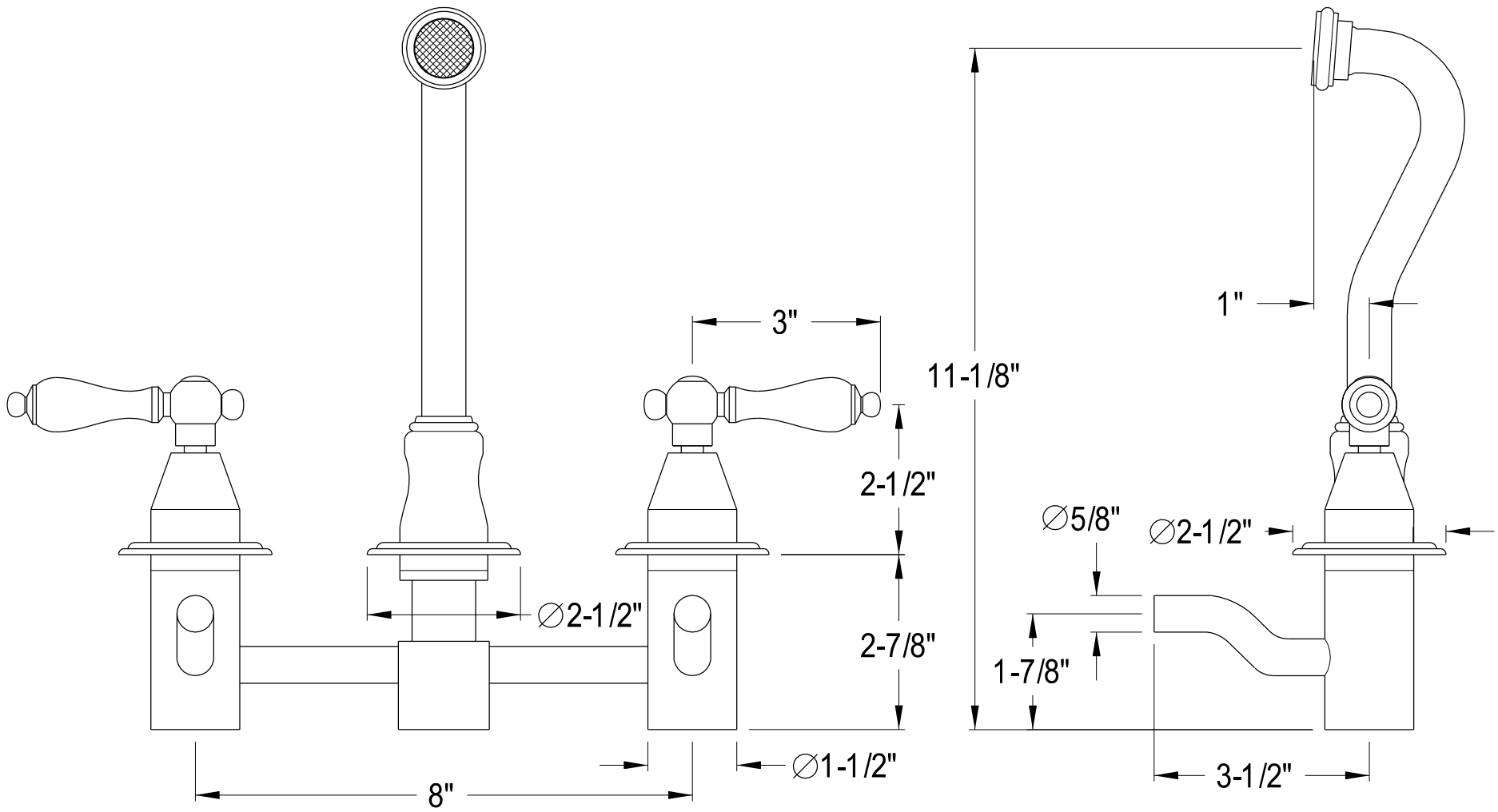
8" Wall Mount Sink Faucet With Brass Lever Handle