KS2971,2,5,8TL
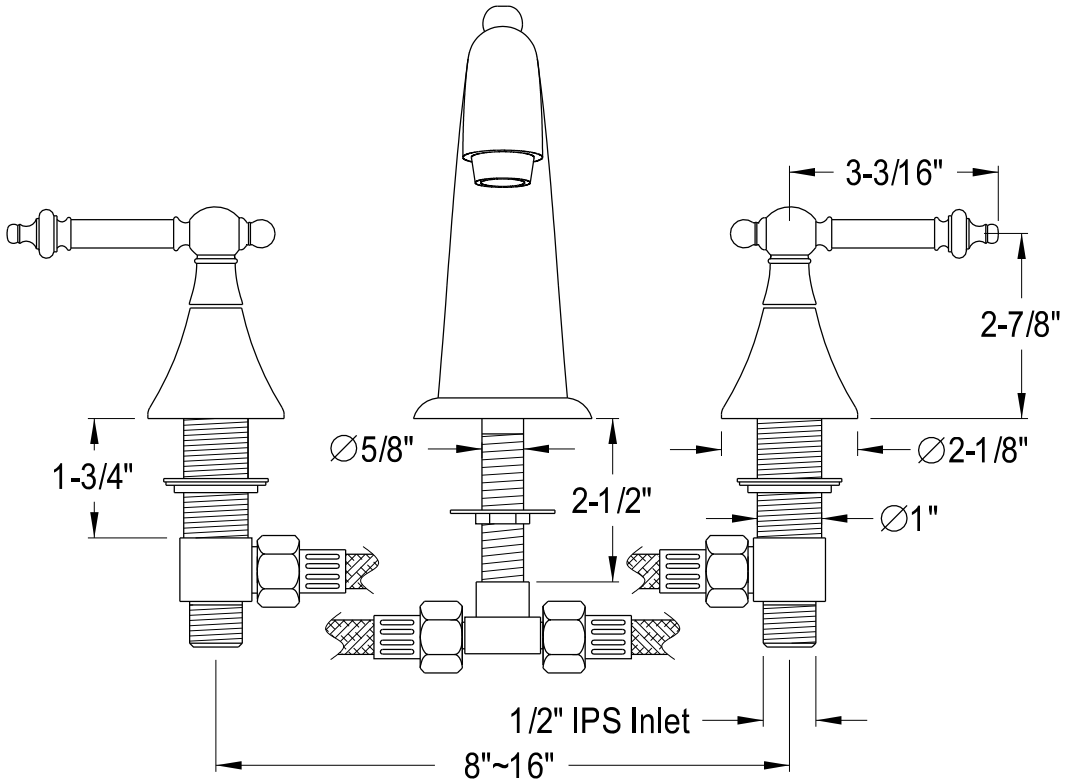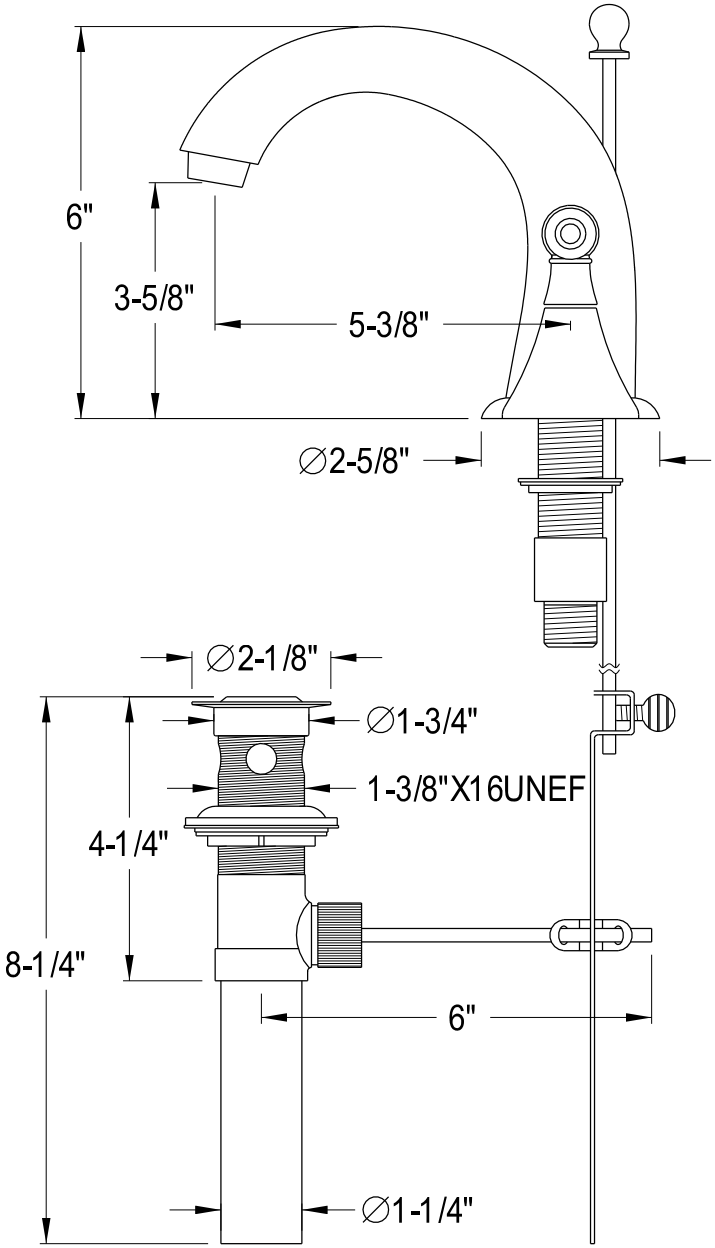
8" Widespread Twin Handles Lavatory Faucet with Brass Pop-Up