KS2961,2,5,8DX
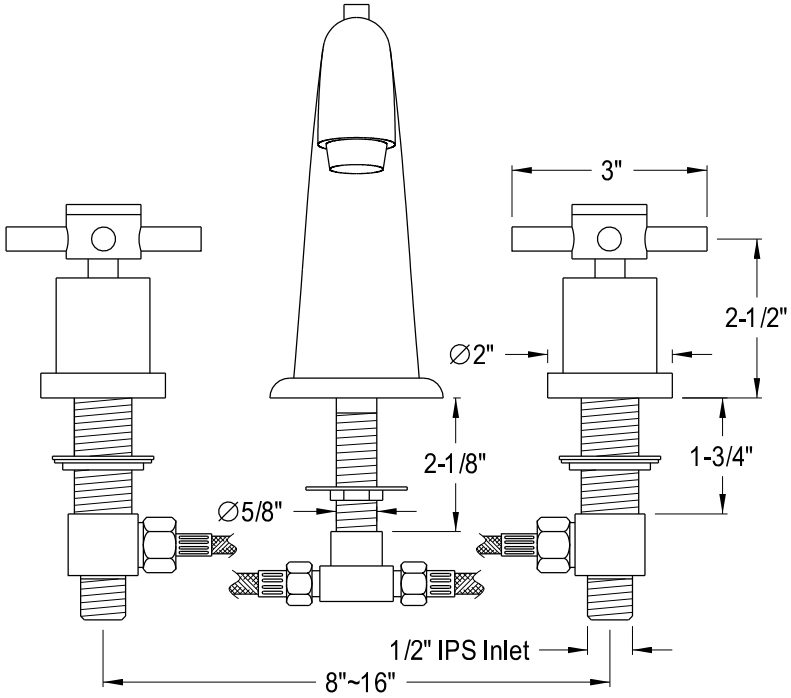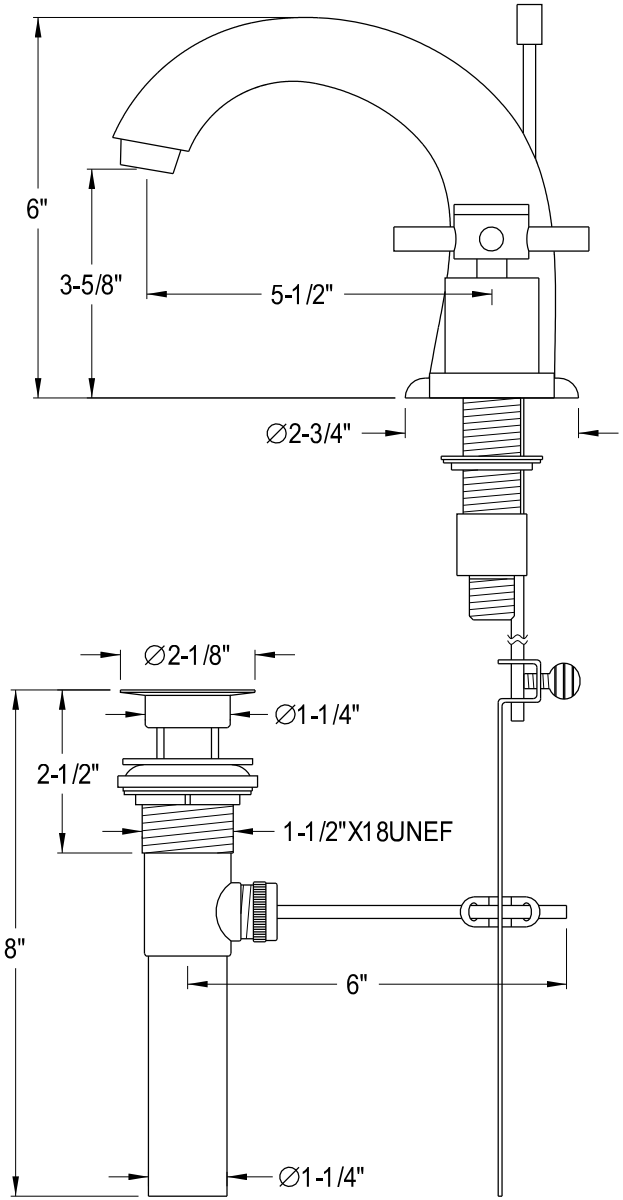
8" Twin Handles Widespread Lavatory Faucet with Brass Pop-Up