KS2951,2,5,8ML
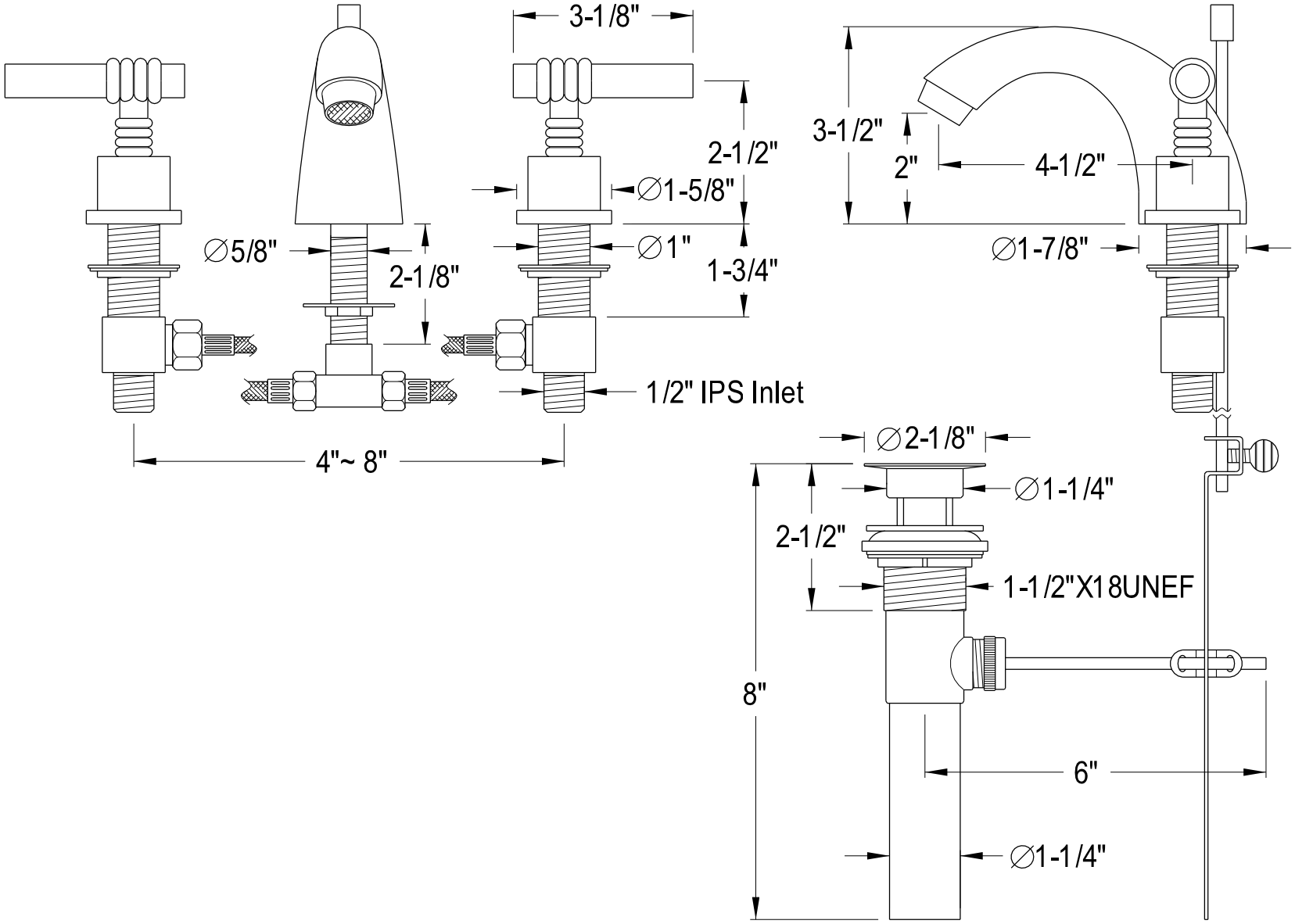
Widespread Lavatory Faucet With Brass Pop-Up