KB2791,2,5,8NLBS
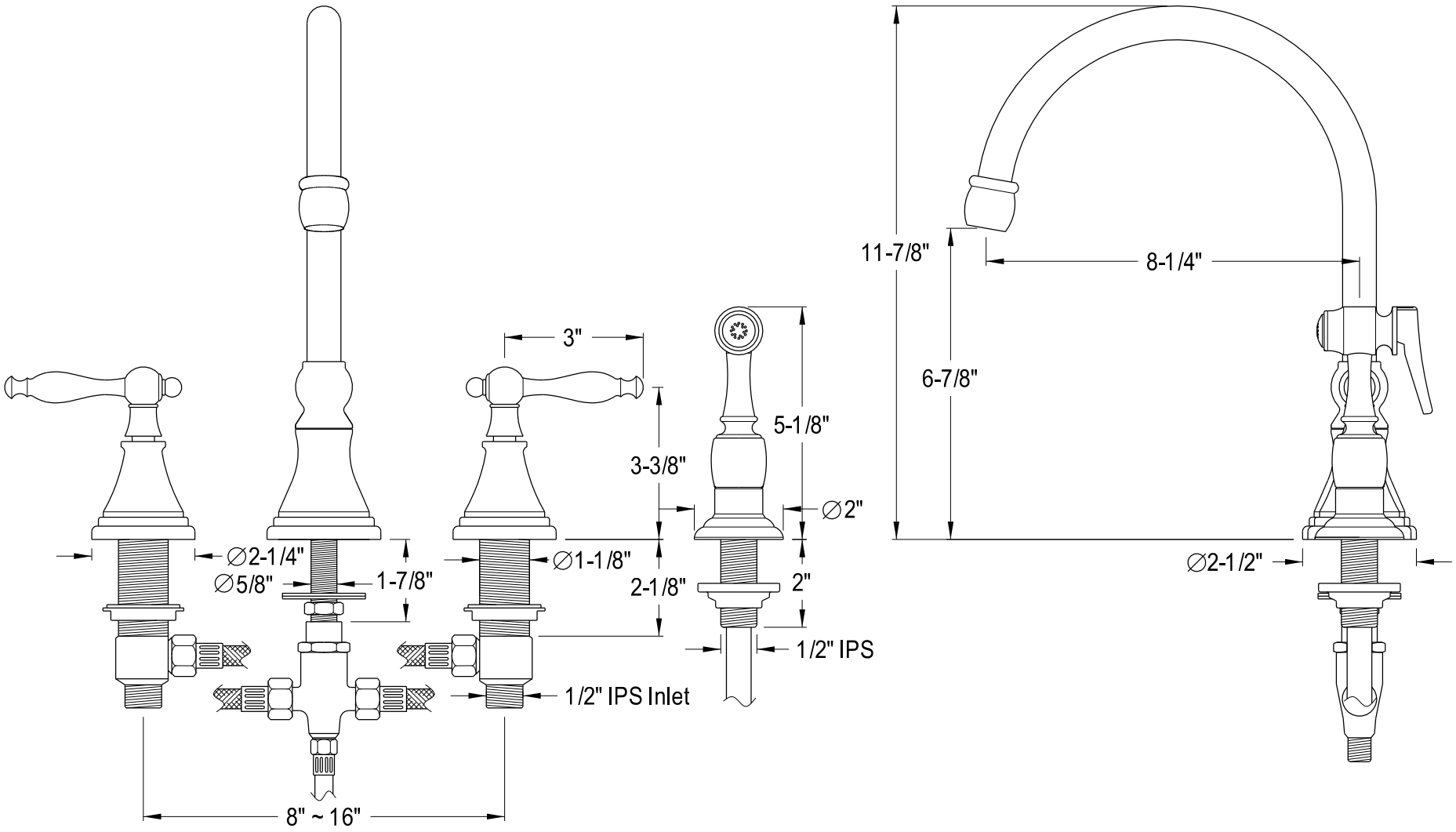
8" Deck Mount Kitchen Faucet With Brass Sprayer