KS1101,2,5,8PX
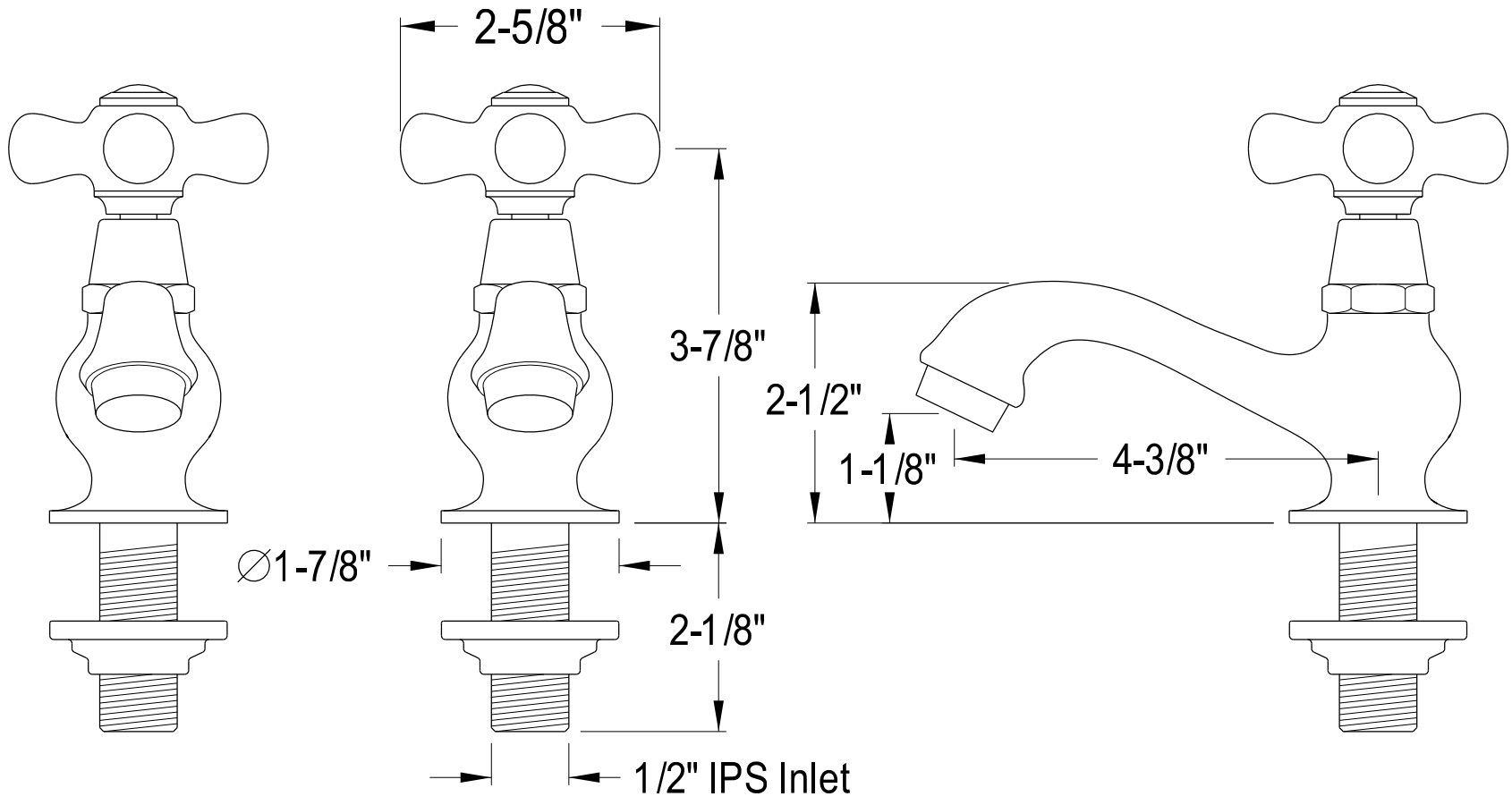
Heritage Classic Basin Faucet With Porcelain Cross Handle