KB7971,2,5,8BL
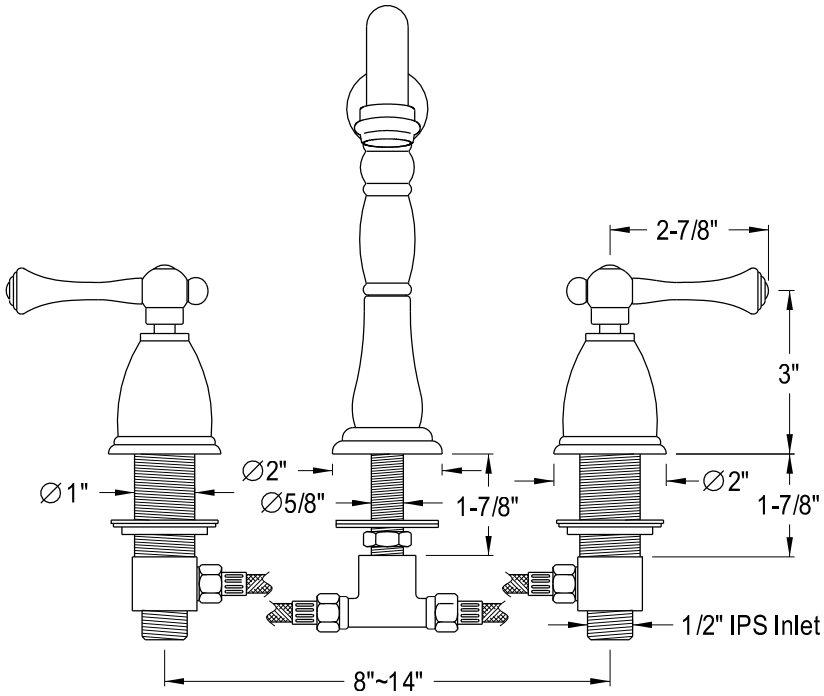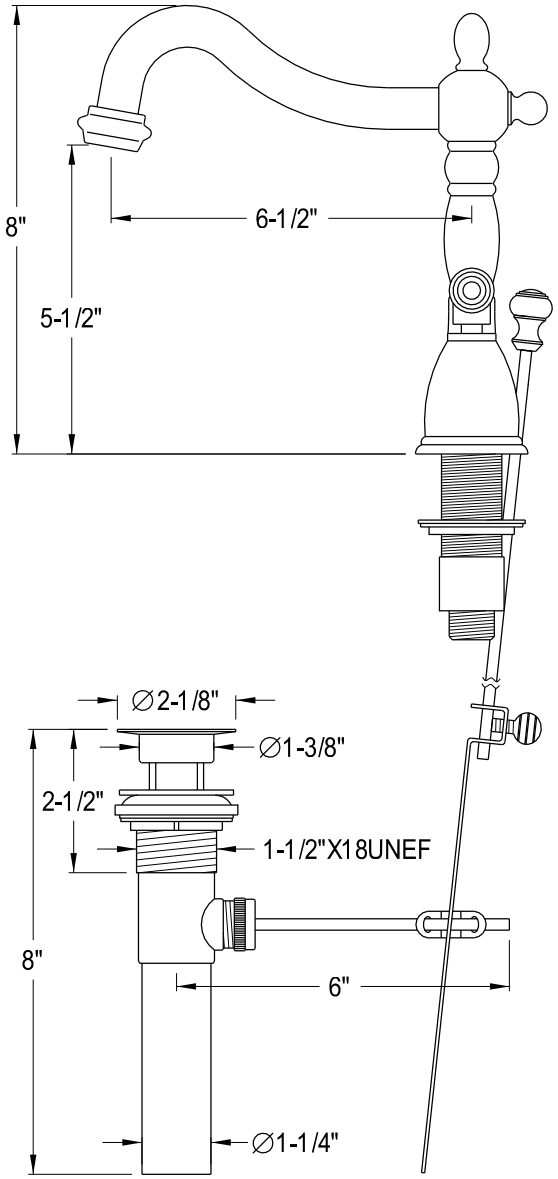
8" Widespread Lavatory Faucet With Brass Pop-Up