KB1971,2,3,5,6,8,9AX
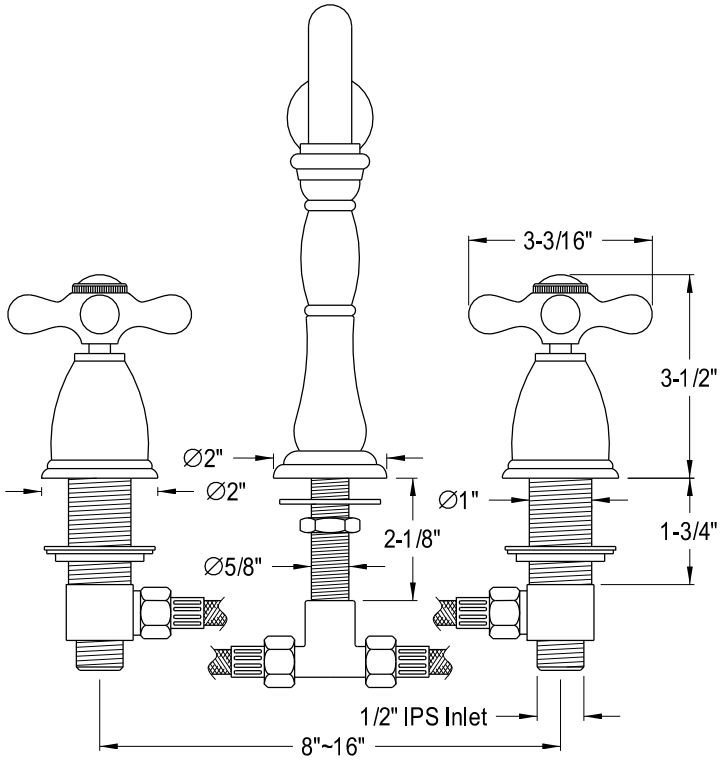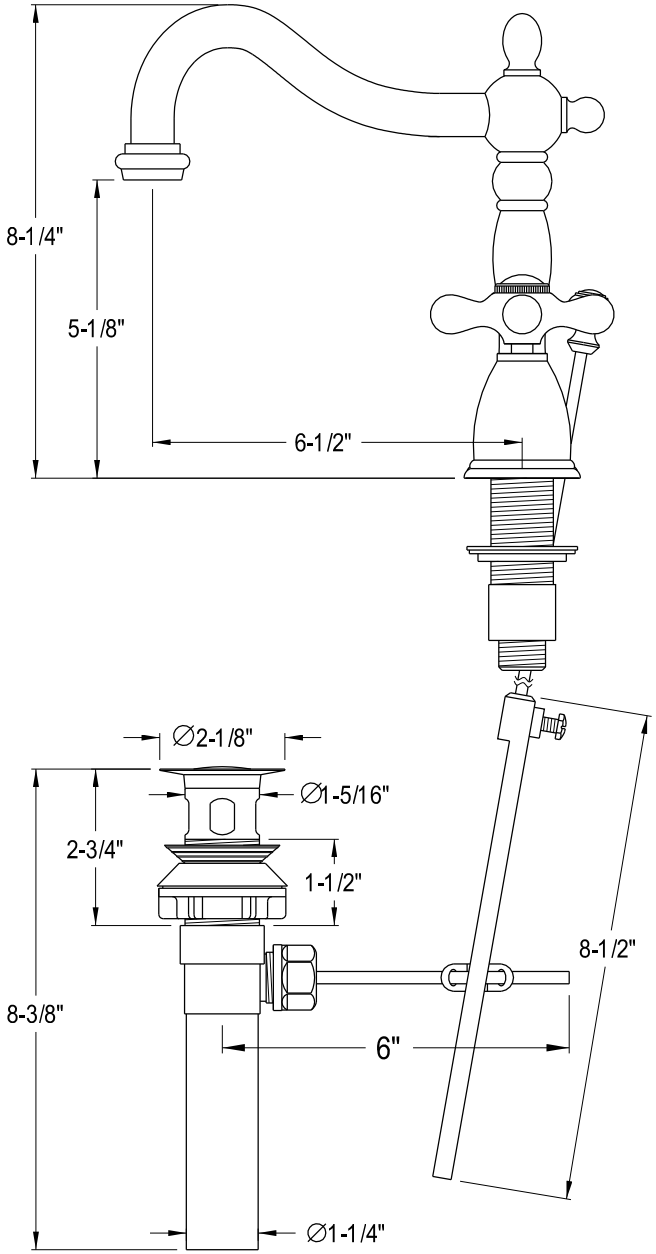
8" Twin Handles Widespread Lavatory Faucet with ABS/Brass Pop-Up