CC43100,1,2,3,5,6,7,8DLTKB30
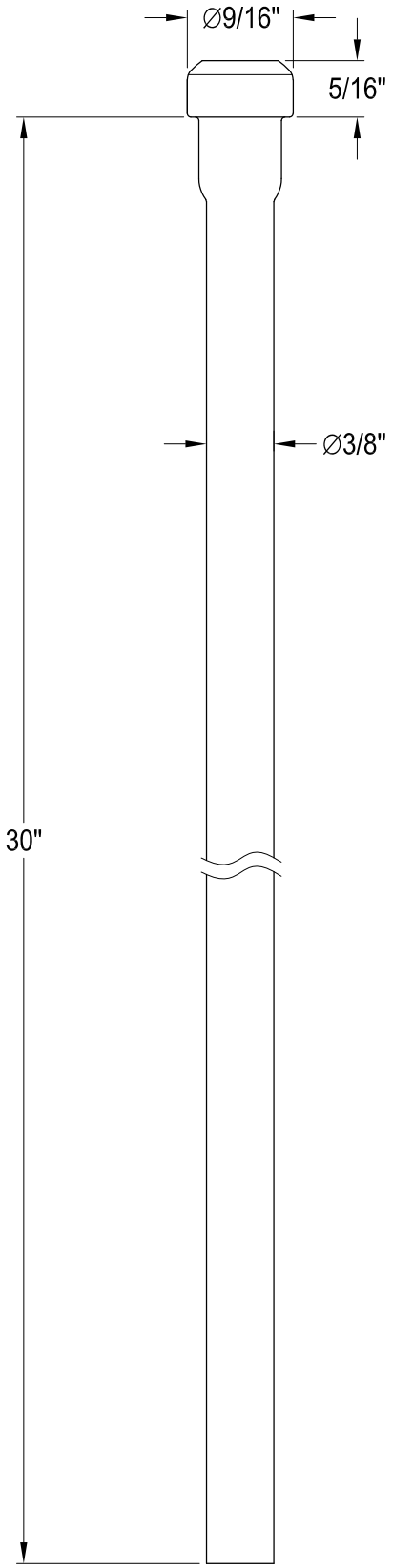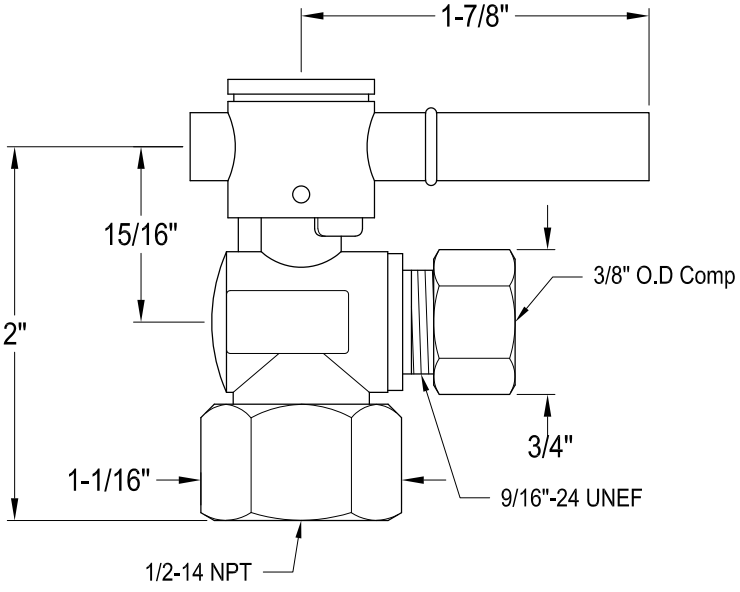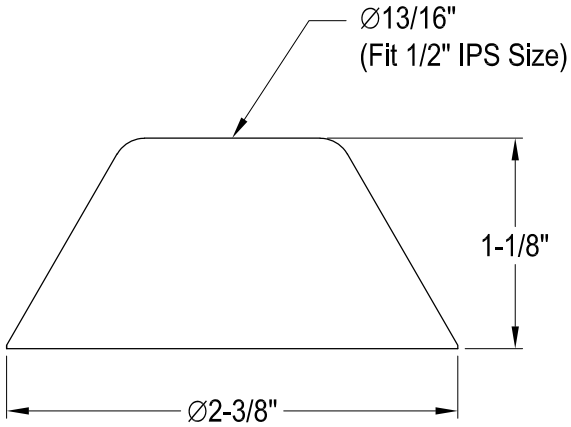
Plumbing Toilet Trim KIT