KS4030,1,2,3,5,6,7,8TAL
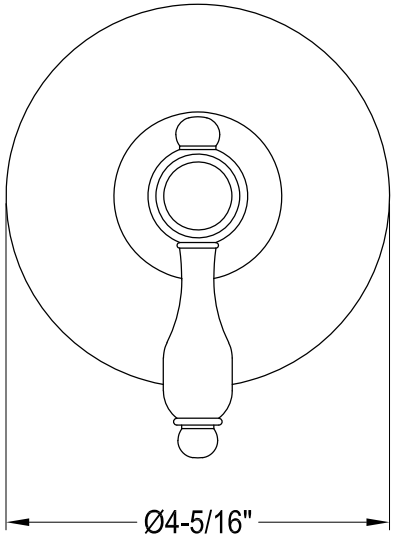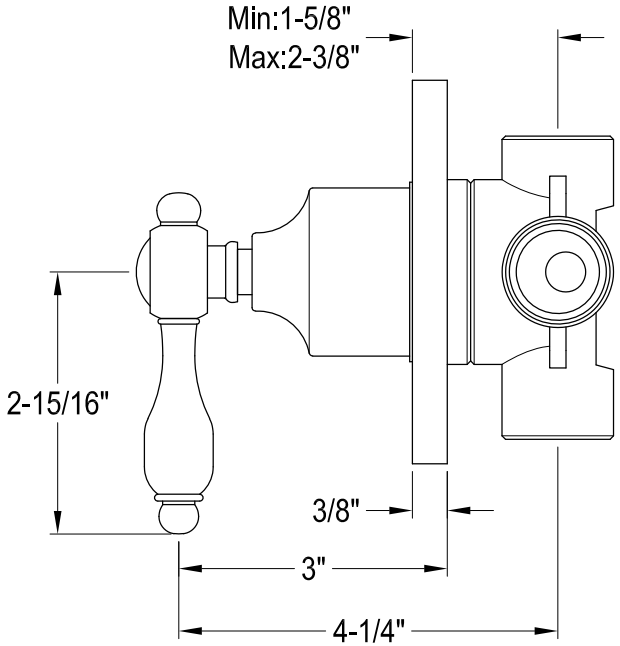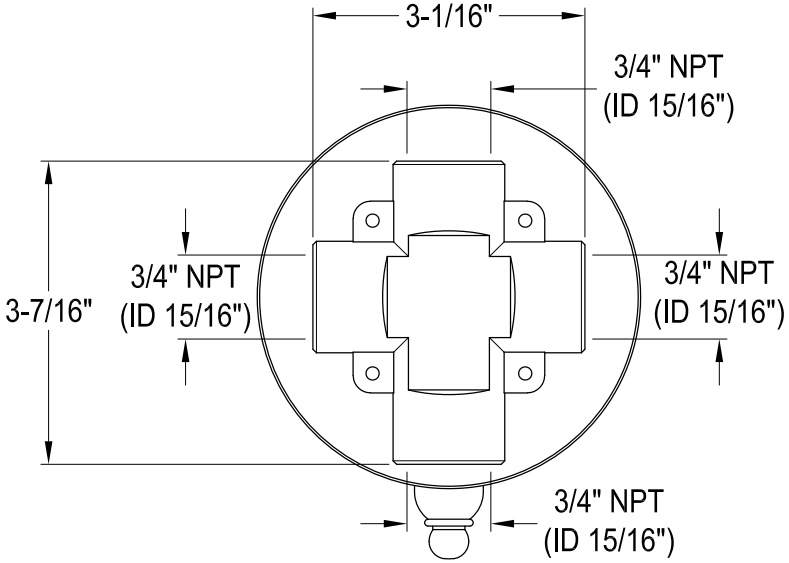
Six-Way Diverter Valve with Single Handle & Round Plate