ZKB161B
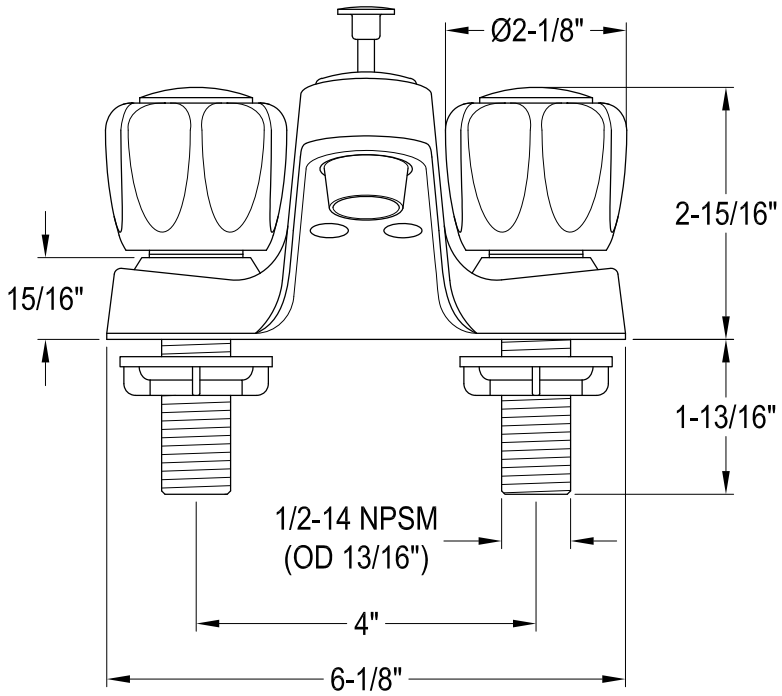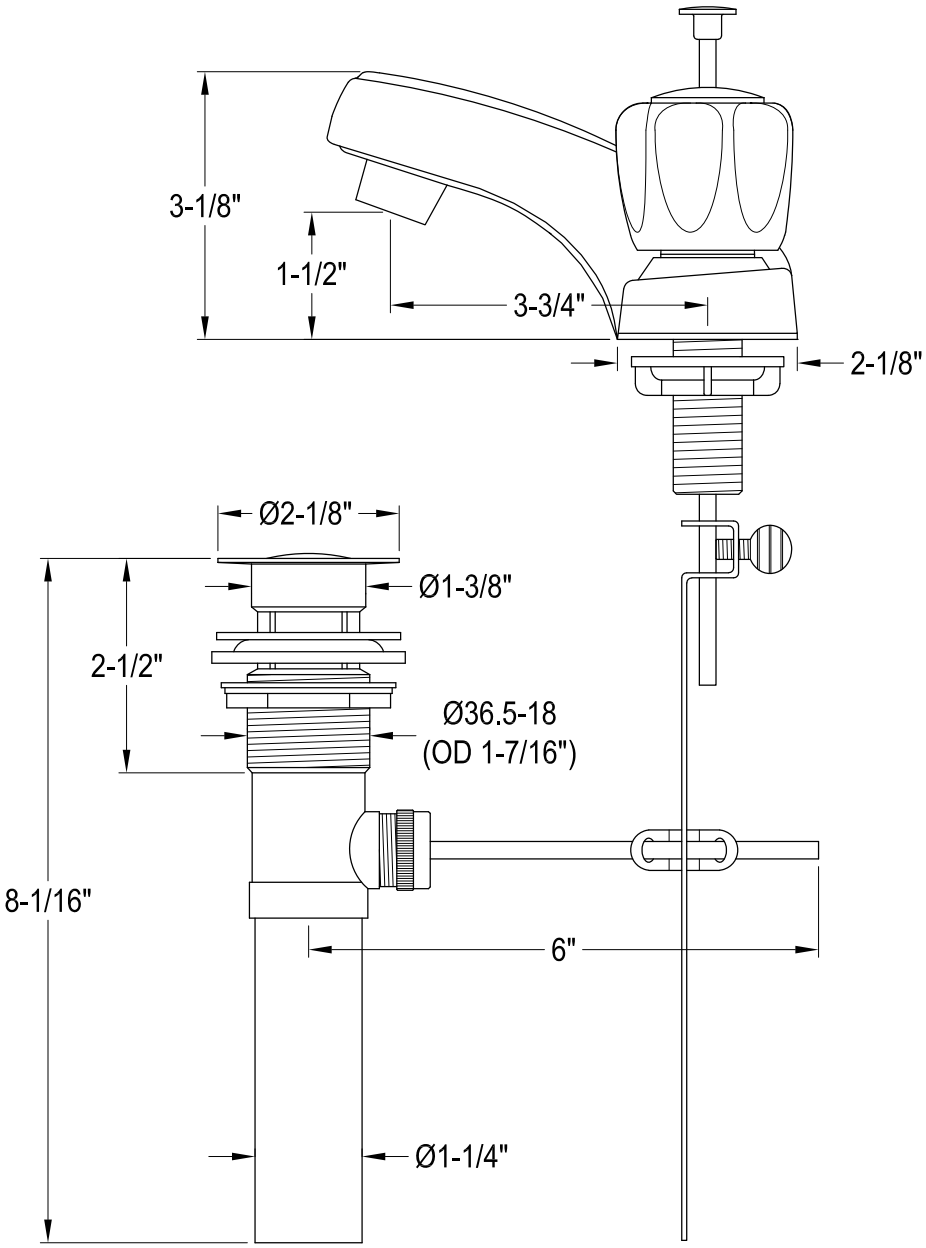
Twin Handles 4" Centerset Lavatory Faucet with Brass Pop-Up