KS8130,1,5,7,8DPL
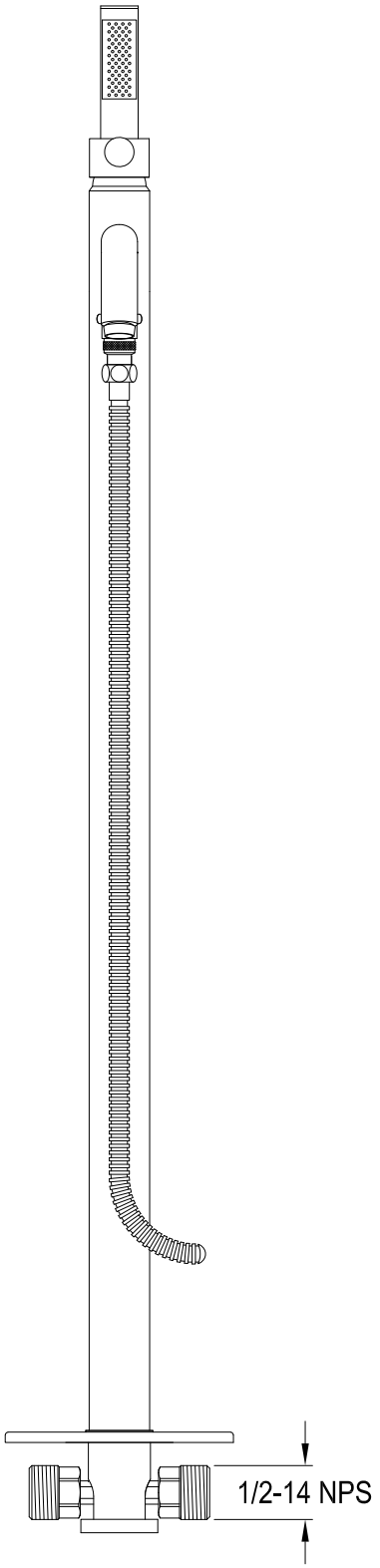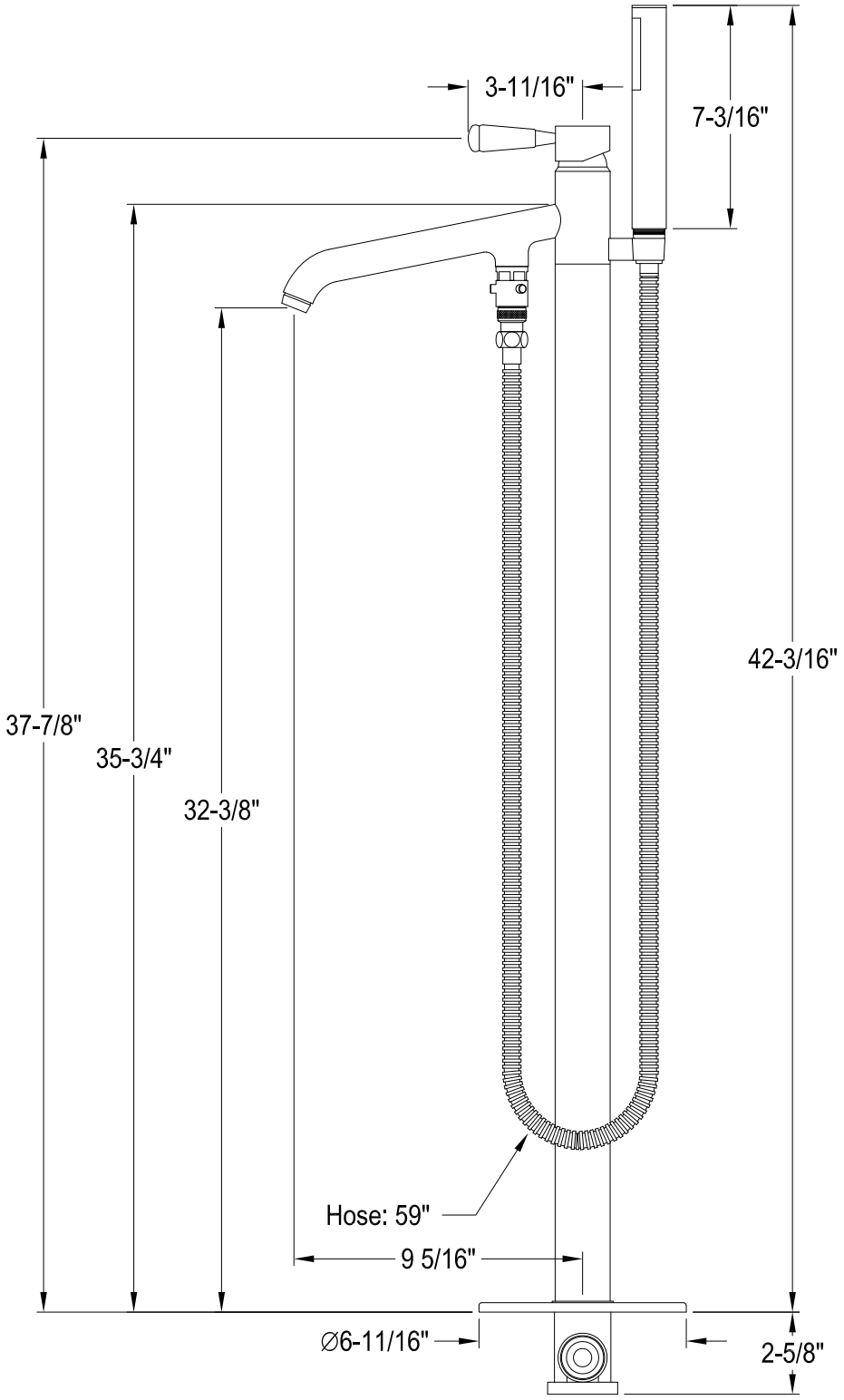
Roman Tub Filler With Telephone Shower Set