KS8050,1,7,8CKL
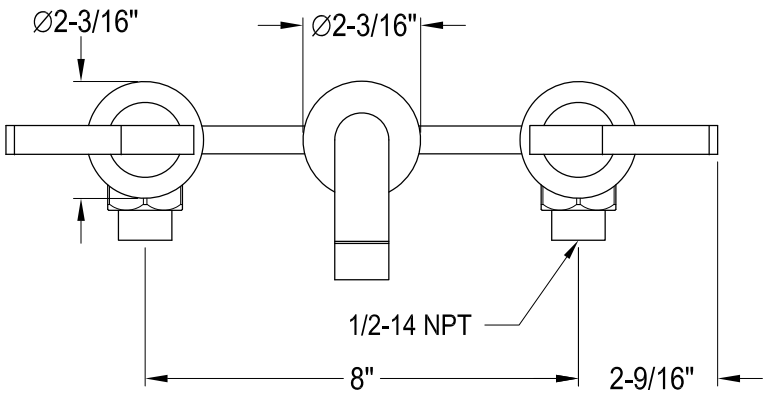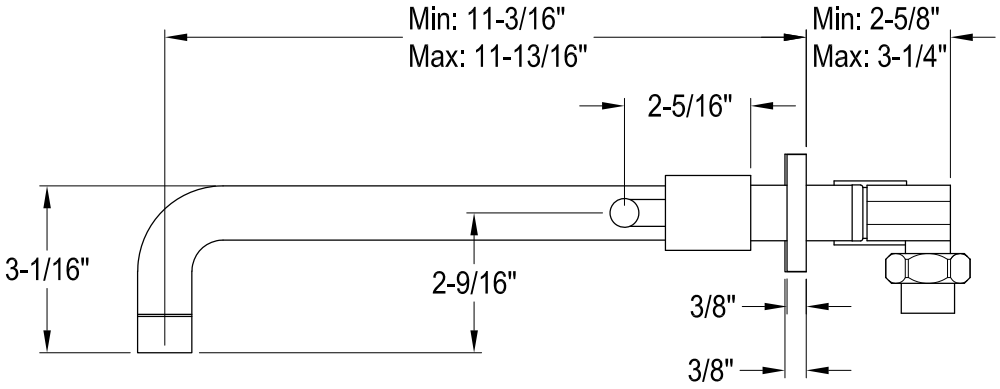
Twin Handles Wall Mount Tub Filler