KVSP3122A0,1,2,5,6,8
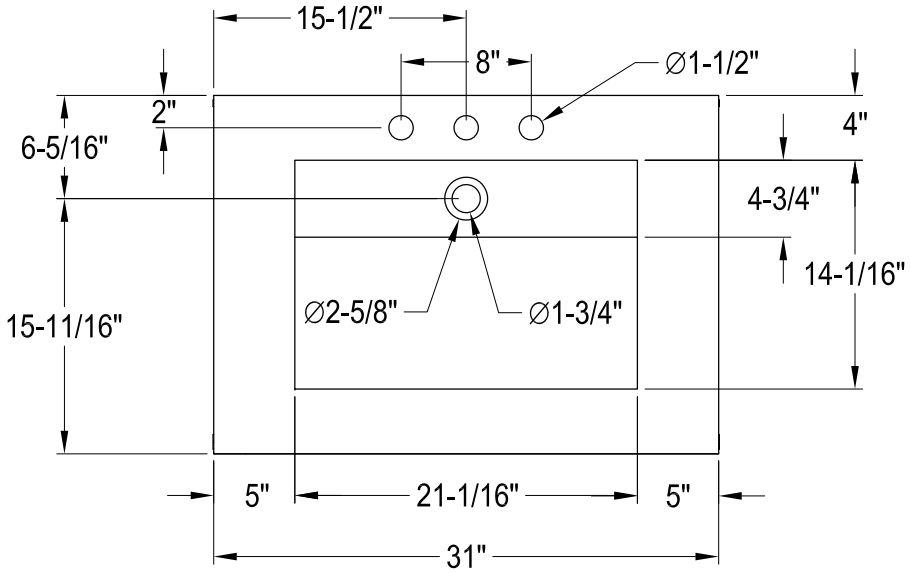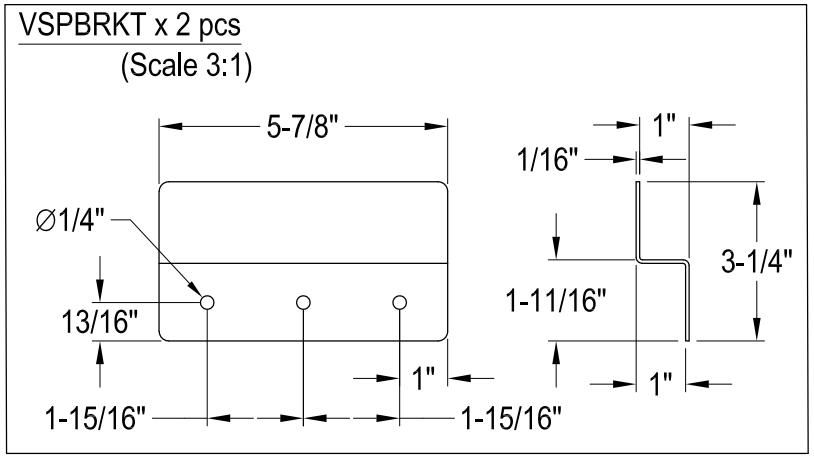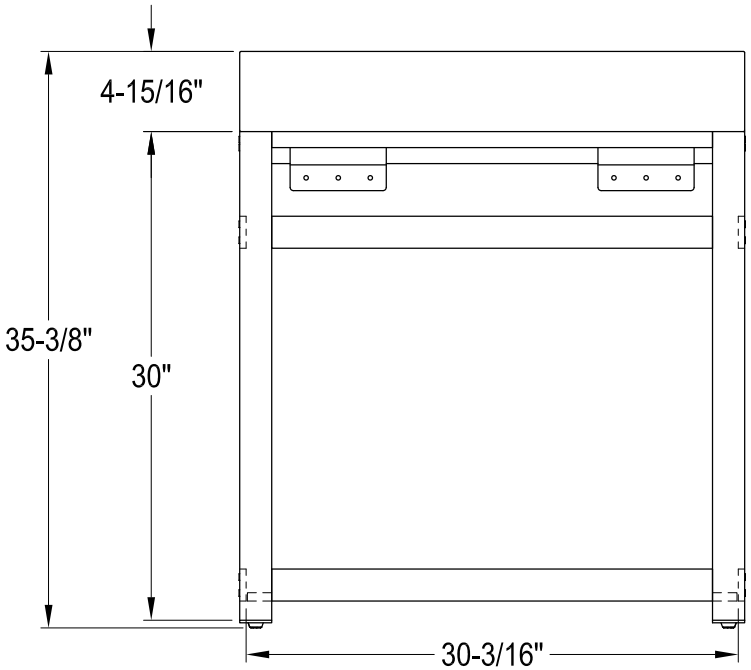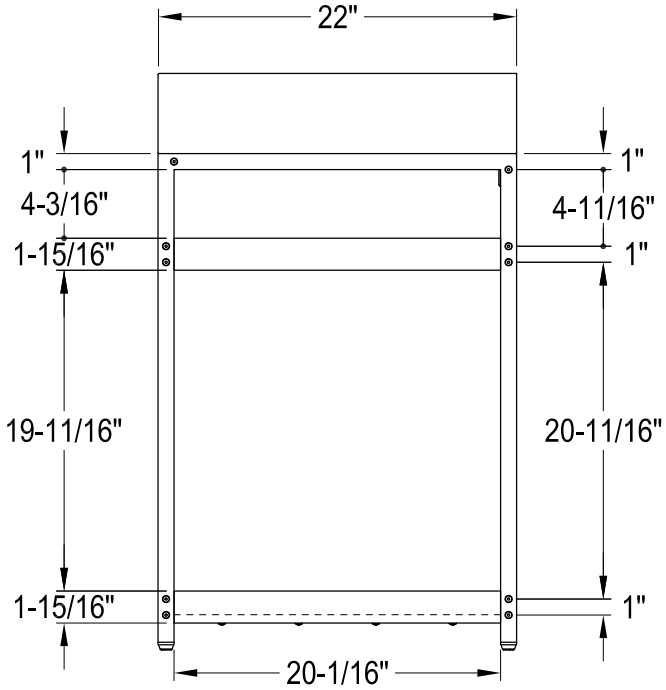
31" Stainless Steel Sink With Steel Console Sink Base