CC26L1,CC25L2,5,8

Mini Widespread Lavatory Faucet With Brass Pop-Up

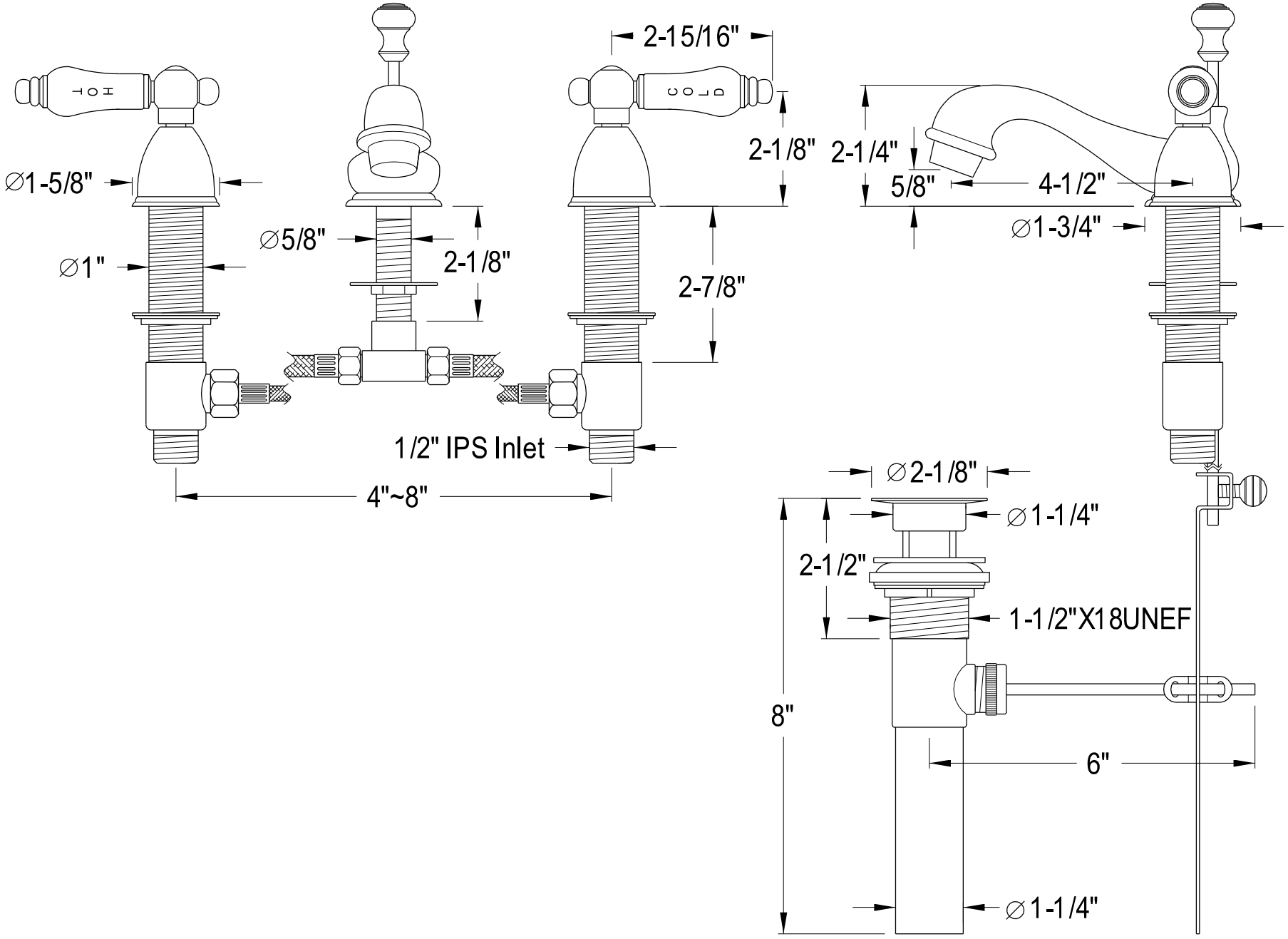

Ref# CC26L1,CC25L2,5,8 | 2014-01-B