GKTSF302494

Stainless Steel Farmhouse Self-Rimming Single Bowl Kitchen Sink, 4 Holes, (L)29-3/4" X (W)24-5/16" X (D)9-5/16"

	Depth	SS Type	Thickness
Sink Body	9-5/16"	18-10 304 Grade	1.05mm(18G)
Front Apron	9-5/16"	18-10 304 Grade	1.05mm(18G)

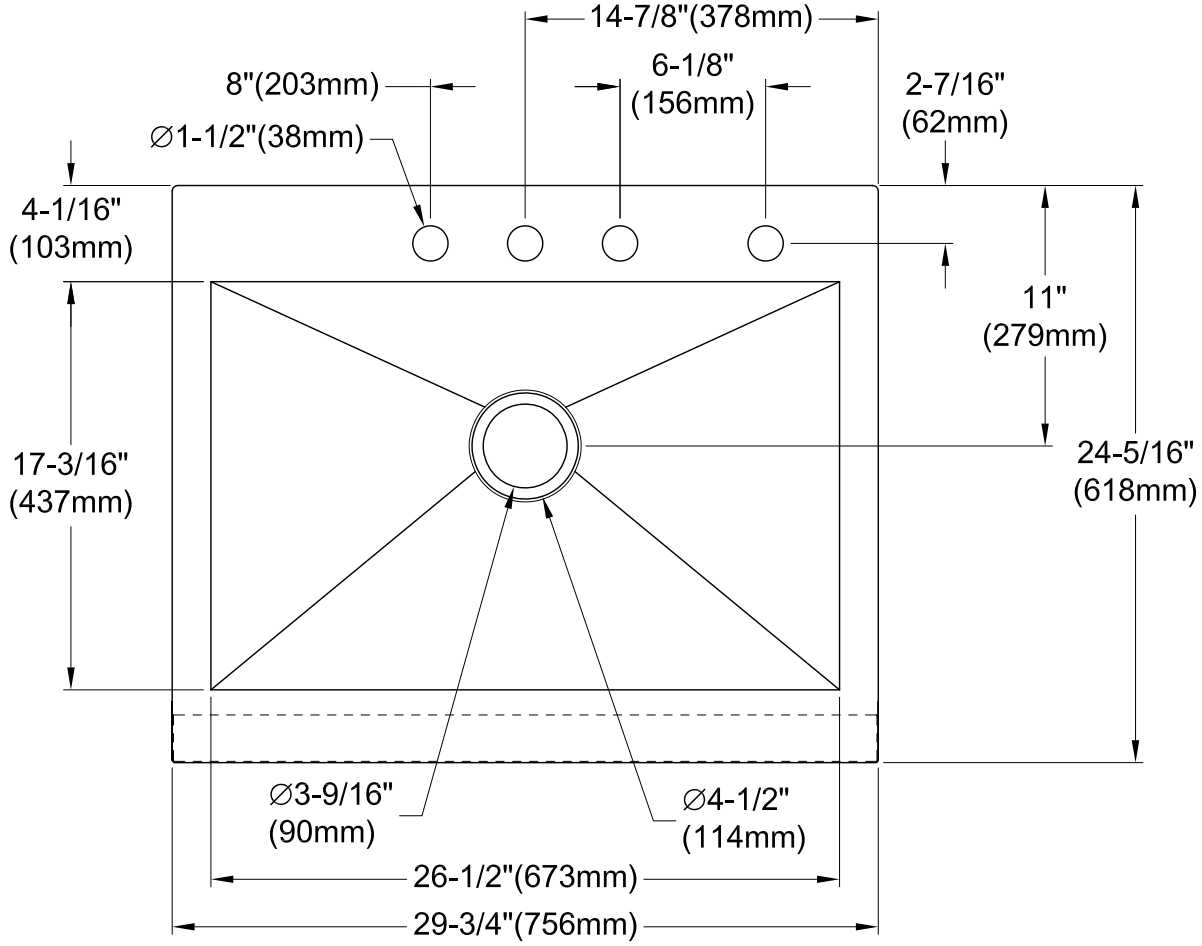

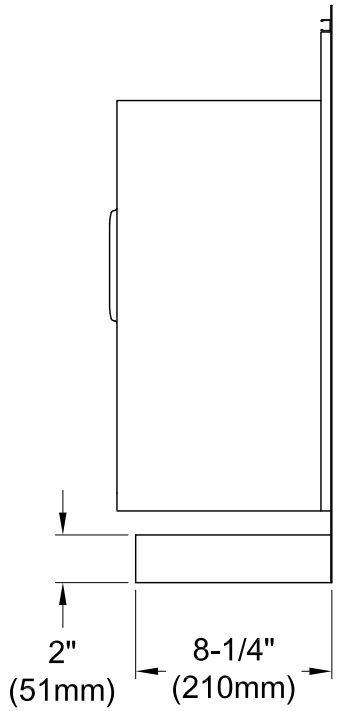

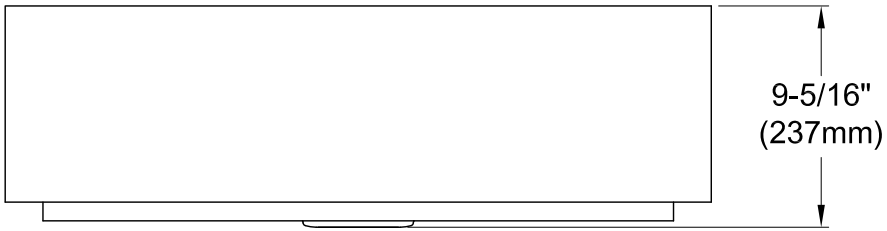

Ref# GKTSF302494 | 2018-10-A