GKDS151581

Stainless Steel Self-Rimming or Undermount Single Bowl Bar Sink , 1 Hole, (L)15" X (W)15" X (D)8-3/16"
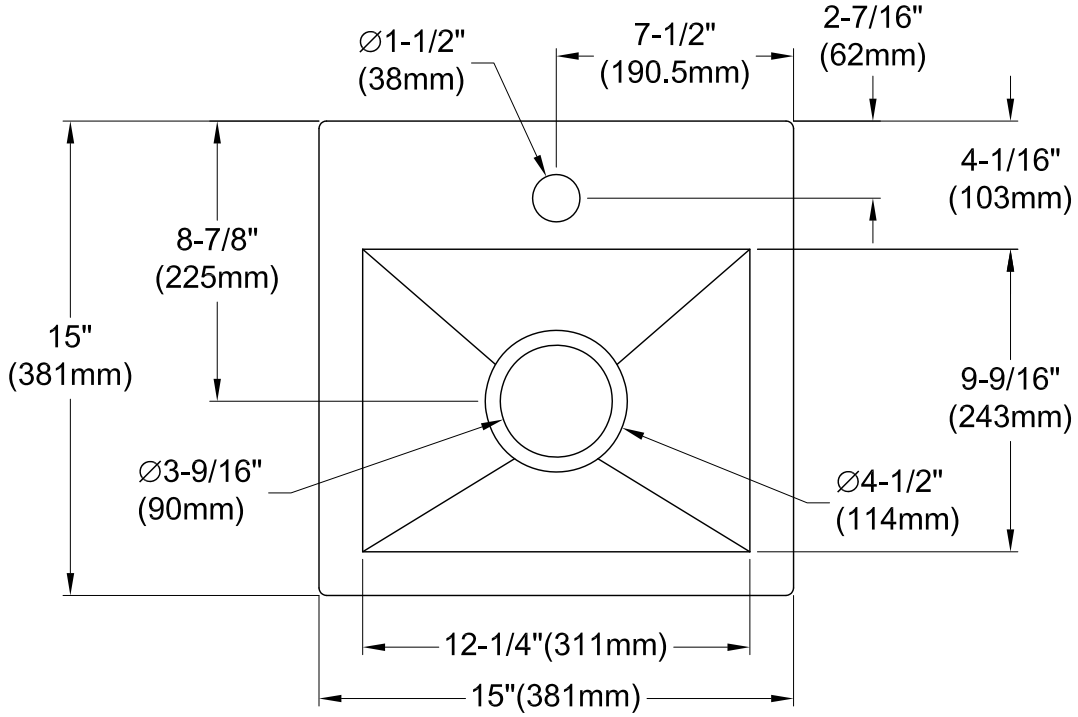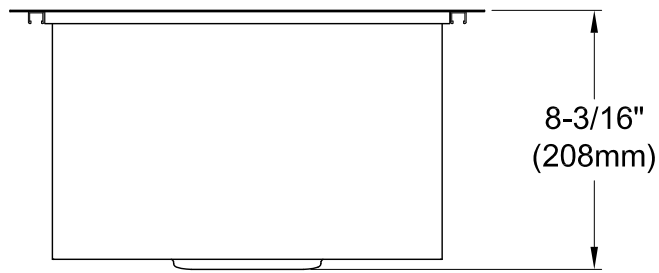
Depth	SS Type	Thickness
8-3/16"	18-10 304 Grade	1.05mm(18G)