KB1791,2,5,8PKLLS
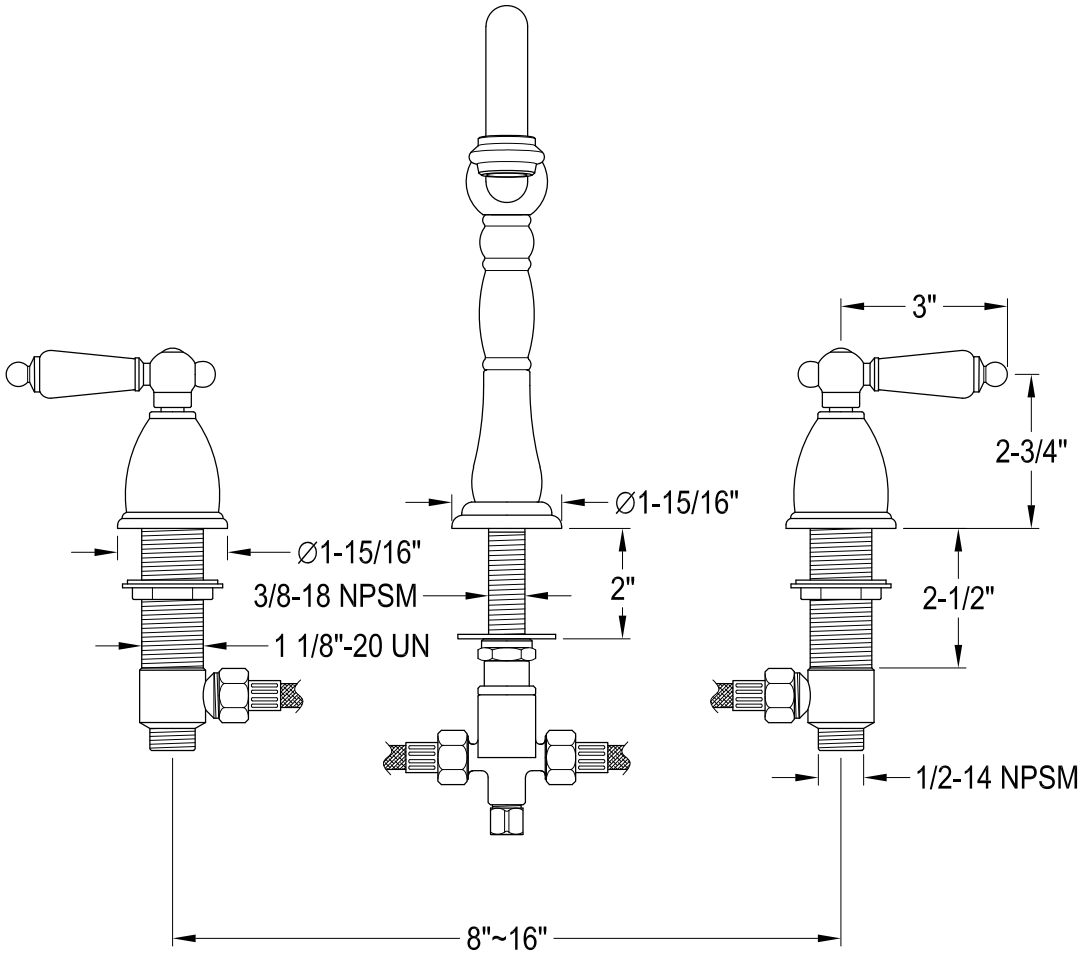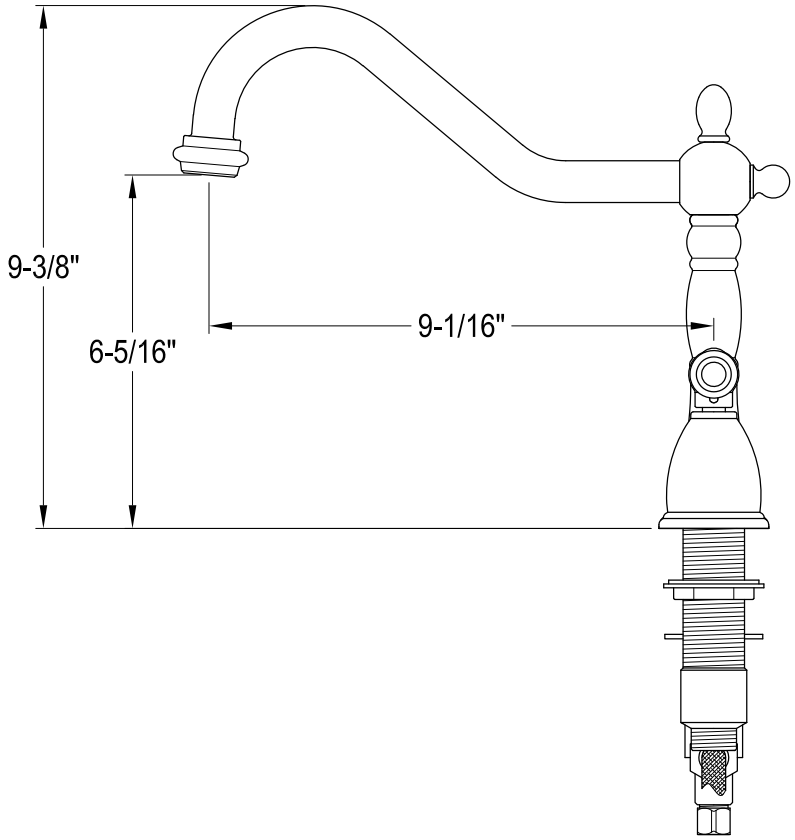
Widespread Kitchen Faucet